SICME | ORANGE1

Antriebe Neumann GmbH
Parkstrasse 50 • 61231 Bad Nauheim

Tel.: 06032 - 6079383
Fax: 06032 - 6079384
info@neumann-antriebe.de
www.neumann-antriebe.de

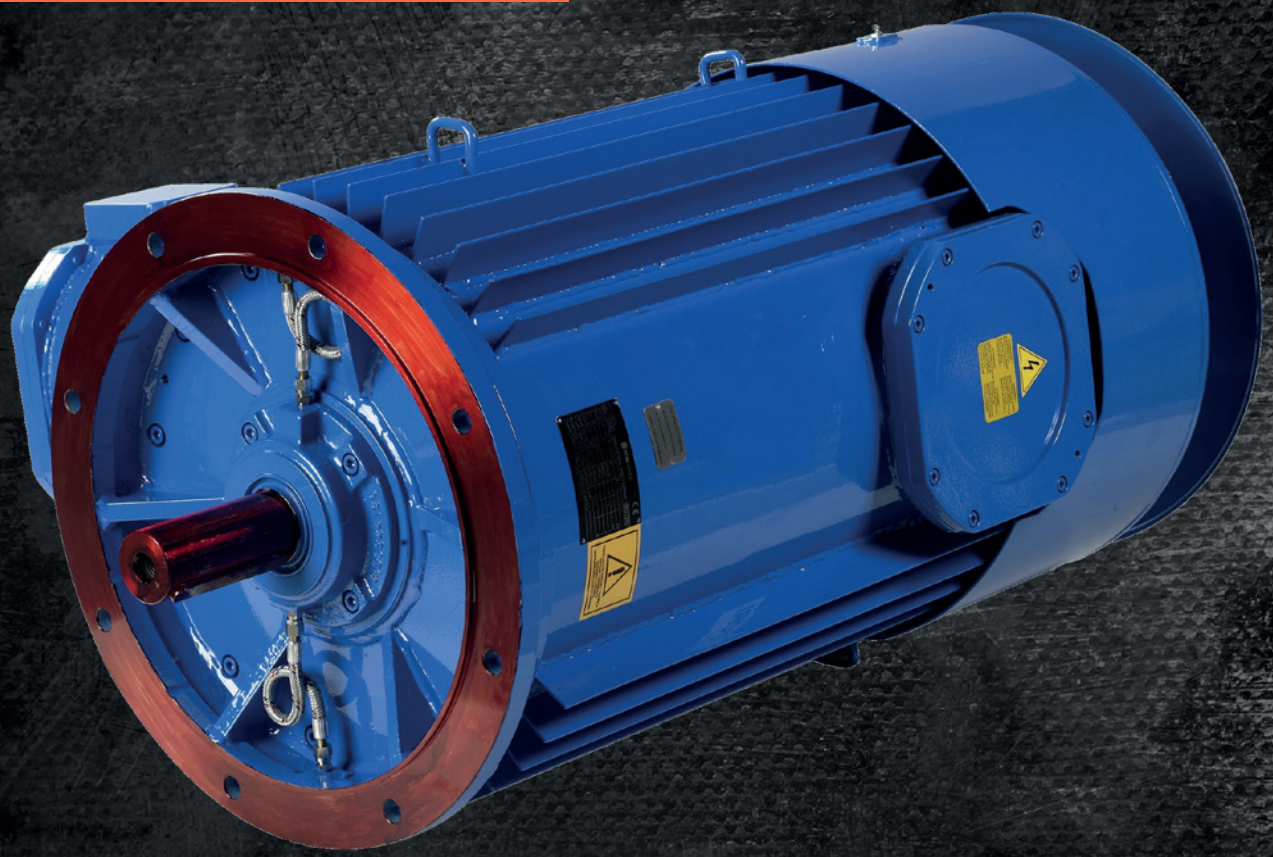

C Series / Sizes C7 - C23

FLAMEPROOF DC MOTORS

For Hazardous Areas

Member of ORANGE1 HOLDING

ORANGE1 HOLDING

A dynamic, strong and ambitious Group

Orange1 Holding is an international renown Group, one of the most important European manufacturers of single-phase and three-phase asynchronous electric motors. It has an annual capacity of more than 1 million motors and 5 million electric stators. The group, established in 1971 by Leone Donazzan, chaired today by his son Armando Donazzan, is strongly focused on technological innovation, performance and customization to meet individual clients requirements.

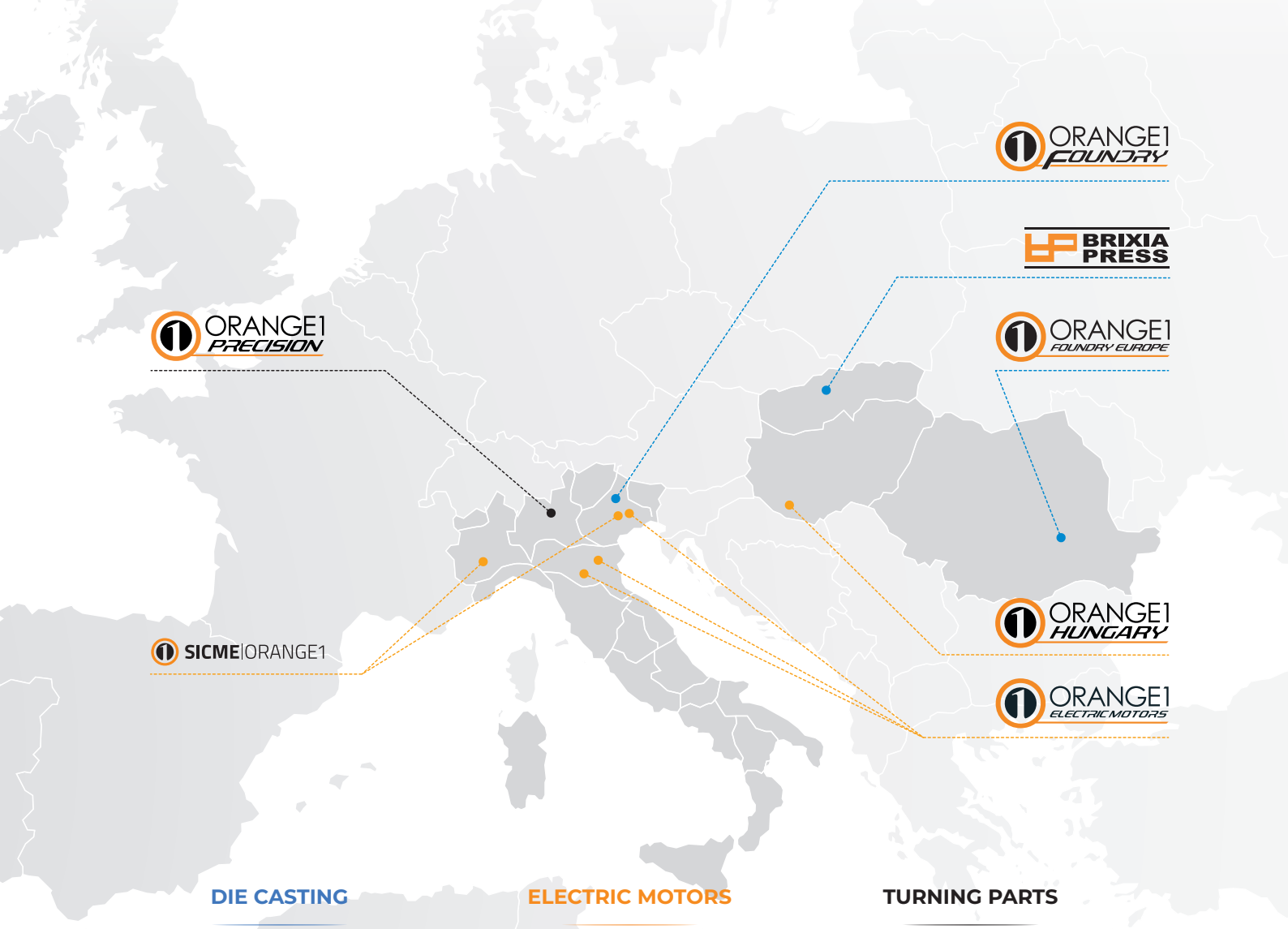

DIE CASTING **ELECTRIC MOTORS** **TURNING PARTS**

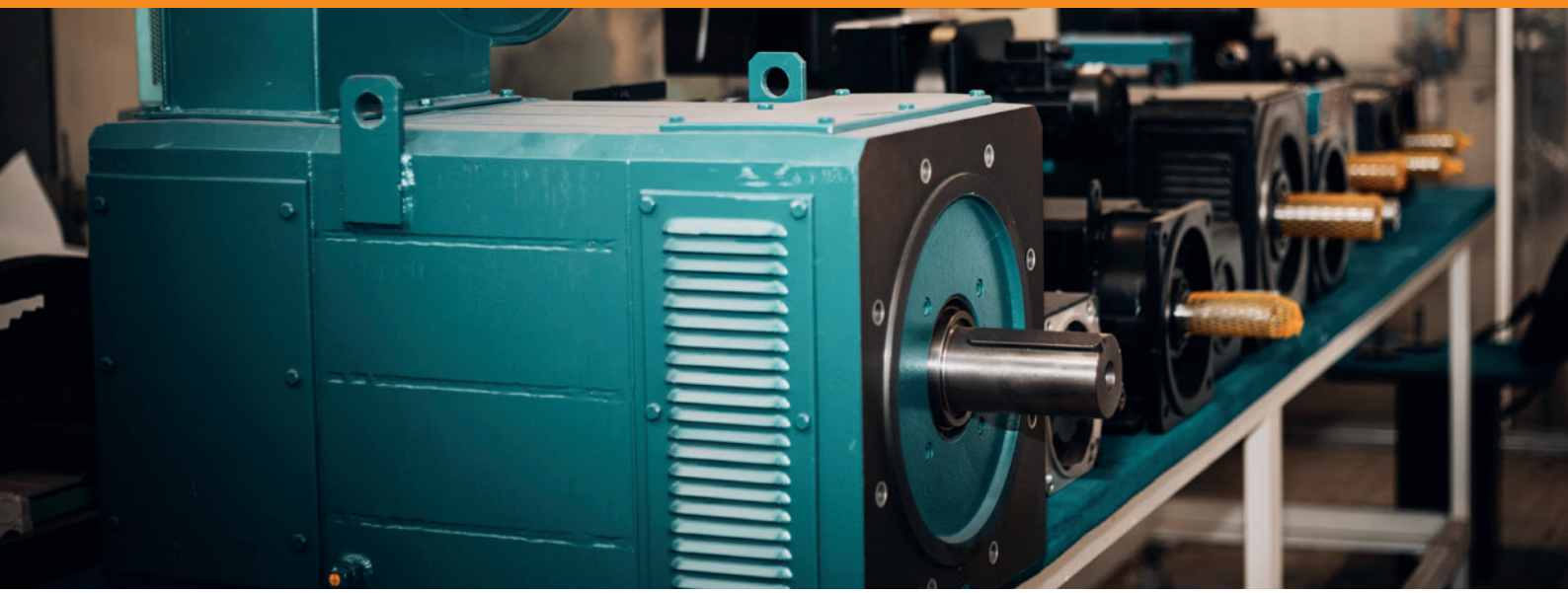

SICME | ORANGE1

Sicme Orange1 has born from the merge of Sicme Motori and Magnetic.
Sicme Motori, founded in 1967, produces high quality DC motors and it represents a benchmark of excellence for its technology providing the best economical solutions for many different applications. Since 2002 it has been cooperating actively with the Institute of Electrical Engineering of the Polytechnic of Turin and it has been one of the world's largest producers of wind generators. In 2008, it has developed motors with ASR technology, the most revolutionary type of electric machine in the world, and in 2014 developed an innovative range of synchronous reluctance motors IE4 with a specific patent. A company with a 40 years history, well-known around the world for the high quality and product technology, it produces Asynchronous motors up to 3700 Kw, Synchronous motors up to 2700 Kw, Hydroelectric Generators up to 3000 Kw, Mini-Wind generators up to 200 Kw and Wind Turbines up to 5000 Kw. Magnetic Motors, founded in 1973, manufactures electrical machines specifically designed to be used for variable speed application. The company is located in Montebello Vicentino, Vicenza – Italy.

PRODUCTIONPLANTS

LOCATION	MOTORS PRODUCTION
MONTEBELLO VIC.NO - ITALY 36054 (VI) Via del Lavoro 7	AC VECTORIAL MOTORS DC MOTORS BRUSHLESS MOTORS TORQUE MOTORS
TORINO - ITALY 10156 (TO) Strada del Francese 130	AC VARIABLE SPEED MOTORS DC MOTORS GENERATORS SERVICE RELUCTANCE MOTORS

SICME | ORANGE1

General

Flameproof DC motors C Series has been expressly designed for a fully reliable operation and in conformity of safety prescriptions as requested by the regulation in force for electrical installations in dangerous environments.

- Group: II (not mine)
- Category: 2 (high protection)
- Type of explosive atmosphere: G (gas, steams, smokes)
- Execution: Ex d IIB For frame size C7-C11-C13-C16-C19-C23
  Ex d IIC Only for frame size C7C
- Temperature Class: T4 for duty from S1 to S9
- Protection Degree: IP55 For motor frame C7 - C7C – C13 – C23
  IP56 For motor frame C11 – C16 – C19

Motor design

Standards : IEC 60034 – IEC 60079-0 – IEC 60079-1
Supply : Batteries, Ward-Leonard control
Insulation : Class H
Temperature rise : Class F, B
Ambient temperature : -20°C - + 60°C
Minimum stocking temperature: - 50°C
Maximum working temperature: 40° C (from 41°C to 60° C with derating)
Altitude of installation : 1000 m asl (up to 4000 m asl with derating)
Max. surface temperature : +135°C (temperature class T4)
Vibration grade : A or B according with 60034-14
Type of cooling : IC 411
(IEC 60034-6: self-ventilated totally enclosed motor, frame externally cooled)
Protection Degree : according to IEC 60034-5
Mounting : according to IEC 60034-7
Main terminal box : at left side, DE view

Options available

Thermal protectors (NC contact)
PTC thermal protector
PT100 thermistors
Tachometer (explosion-proof type)
Pulse generator (explosion-proof type)
Anti-condensation heater (excluding frame C7)
Tropicalization of windings

Certifications

Frame Size	Execution + Temperature Class	ATEX Certificate No.	IECEx Certificate No. Issue No :1	TR CU Ex Certificate N° 0188484	CHINA	INMETRO
C 7	II 2G Ex d IIB T4	BVI 15 ATEX 0061 X Rev.1	IECEx EPS 15.0048	RU C-IT.HA65.B.00478/20	-	BVC20.3802
C 7C	II 2G Ex d IIC T4	BVI 15 ATEX 0061 X Rev.1	IECEx EPS 15.0048	-	-	BVC20.3802
C 11	II 2G Ex d IIB T4	BVI 15 ATEX 0061 X Rev.1	IECEx EPS 15.0048	RU C-IT.HA65.B.00478/20	-	BVC20.3802
C 13	II 2G Ex d IIB T4	BVI 15 ATEX 0061 X Rev.1	IECEx EPS 15.0048	RU C-IT.HA65.B.00478/20	-	BVC20.3802
C 16	II 2G Ex d IIB T4	BVI 15 ATEX 0061 X Rev.1	IECEx EPS 15.0048	RU C-IT.HA65.B.00478/20	CNEx19.2490X	BVC20.3802
C 19	II 2G Ex d IIB T4	BVI 15 ATEX 0061 X Rev.1	IECEx EPS 15.0048	RU C-IT.HA65.B.00478/20	-	BVC20.3802
C 23	II 2G Ex d IIB T4	BVI 15 ATEX 0061 X Rev.1	IECEx EPS 15.0048	RU C-IT.HA65.B.00478/20	CNEx18.2639X	BVC20.3802

SICME | ORANGE1

General prospectus for C Series motors according to ATEX Std (IEC 60079-0 and IEC 60079-1)

Group	II (not mines)						
Category	2 (high protection)						
Type of atmosphere	G (gas, steams, smokes)						
Motor type	C7	C7C	C11	C13	C16	C19	C23
Execution	Ex d IIB	Ex d IIC	Ex d IIB			Ex d IIB and Ex d IIB + H2	Ex d IIB
Class of surface temperature	T4		T4	T4	T4	T4	T4
Method of Cooling (IEC60034-6)	IC411						
Method of Cooling (SICME ORANGE1 code)	CVEd						
Protection Degree (IEC)	55		56	55	56	56	55
Minimum working temperature	-20 °C						
Maximum working temperature	+60 °C						
Maximum armature voltage	$440V_{DC}$		$500V_{DC}$	$500V_{DC}$	$500V_{DC}$	750_{DC}	$500V_{DC}$
Maximum armature current (up to 40°C ambient temperature)	$18A_{DC}$		$49A_{DC}$	$49A_{DC}$	$86A_{DC}$	$155A_{DC}$	$200A_{DC}$
Maximum armature current (for 60°C ambient temperature)	$15,5A_{DC}$		$43A_{DC}$	$43A_{DC}$	$76A_{DC}$	$135A_{DC}$	$175A_{DC}$
Maximum motor power	1,2kW		2,4kW	6kW	14kW	25kW	35kW
Maximum motor speed	3600rpm		3000rpm	3000rpm	3600rpm	3200rpm	2500rpm
Temperature rise class	B or F						
Nr. and max section of cables from armature to terminal board	6x2,5mm2		6x25mm2			6x50mm2	
Terminal board installed into the terminal box	50x32 6 leads M4		70x45 6 leads M6			115x70 6 leads M10	
Main Terminal box entry cable	NPT ½		From NPT 1 to NPT 2			From NPT1 ½ to NPT 2 ½	
	From M16x1,5 to M33x1,5		From M20x1,5 to M50x1,5			From M25x1,5 to M75x1,5	
Auxiliary terminal box entry cable (for heaters, thermistors)	N/A		From NPT 1 to NPT 2			From NPT 1 ½ to NPT 2 ½	M25x1,5
			From M20x1,5 to M50x1,5			From M20x1,5 to M75x1,5	
Nr. and theoretical section supply cables into the main terminal box	3x6mm2 + ground		3x35mm2 + ground			3x70mm2 + ground	

Space Heaters

Frame Size	Absorbed power
C7	N/A
C11 – C13	No. 1 x 42W – 230 V 50/60 Hz single phase
C16 - C19	No. 2 x 42W – 230 V 50/60 Hz single phase
C23	No. 1 x 99W – 230 V 50/60 Hz single phase

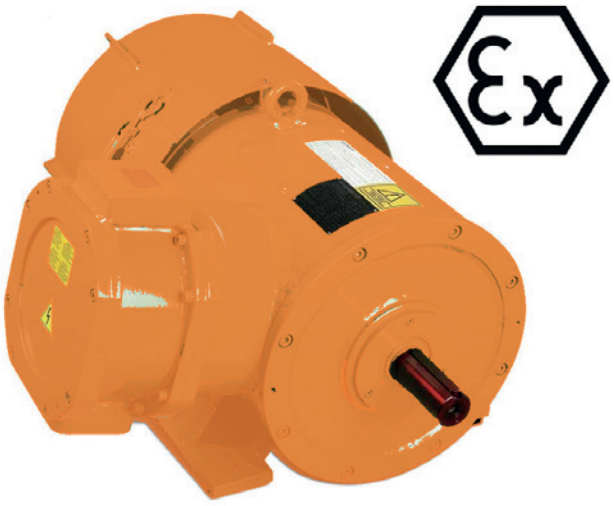

Output Data

Constant torque and/or constant power speed regulation

Constant torque speed regulation below nominal speed is possible in the ratio 1:2 (for duty S1).
This ratio can be increased up to 1:4 for application when load resistant torque is not constant when speed reduces (this is the case, for example, of centrifugal machines such as some pump and fan).
For higher ratio please ask SICME ORANGE1.
Constant power speed regulation above nominal speed (by reducing the field current at constant armature voltage) is possible up to 120% of nominal speed.
For higher values please ask SICME ORANGE1

Motor selection for 110Vdc supply voltage by battery

Frame Size		Rpm	Power output [kW] - Vs. ambient temp.			Absorbed current at 40°C [A]	Nominal torque at 40°C [Nm]	Efficiency at full load [%]
			at 40°C	at 45°C	at 50°C			
C 7L	C 7CL*	1730	0,52	0,5	0,49	6,9	2,9	65
C 11S	N/A		1,15	1,1	1,08	12,9	6,3	78,2
C 11M			1,45	1,4	1,36	16	8	80
C 11L			1,8	1,74	1,7	19,2	9,9	83
C 13S		1820	1,9	1,84	1,8	21,5	10	78,6
C 13M			2,1	2,03	2	25,4	11	75
C 13L			2,7	2,6	2,5	30	14,2	74
C 16S			3,9	3,78	3,65	44,5	20,5	78
C16M			5,2	5	4,9	58,2	27,3	80
C16L			6,5	6,3	6,1	69	34,1	84
C19S			6,2	6	5,8	75	32,5	74,2
C19M			7,8	7,55	7,3	90,2	40,9	78
C 19L			8,8	8,5	8,2	101	46,2	78,2
C 23S			9,8	9,5	9,2	112	51,4	78,7
C 23M			13,2	12,8	12,3	144	69,3	82
C 23L			15,8	15,3	14,8	158	82,9	83

Motor selection for 125Vdc supply voltage by battery

Frame Size		Rpm	Power output [kW] - Vs. ambient temp.			Absorbed current at 40°C [A]	Nominal torque at 40°C [Nm]	Efficiency at full load [%]
			at 40°C	at 45°C	at 50°C			
C 7L	C 7CL*	1770	0,63	0,61	0,59	6,9	3,4	69
C 11S	N/A		1,25	1,2	1,17	12,8	6,7	75,7
C 11M			1,6	1,55	1,5	15,9	8,6	78,5
C 11L			2	1,94	1,9	19,2	10,8	82
C 13S		1870	2,1	2,03	1,96	21,5	10,7	77
C 13M			2,5	2,4	2,3	25,5	12,8	79,5
C 13L			3,1	3	2,9	30	15,8	81
C 16S			4,6	4,45	4,3	45	23,5	80
C16M			6	5,8	5,6	58	30,6	82
C16L			7,5	7,26	7	69	38,3	86
C19S			7,2	7	6,7	75	36,8	76
C19M			9,2	8,9	8,6	90	47	80
C 19L			10,3	10	9,6	101	52,6	80,6
C 23S			11,5	11,1	10,7	113	58,7	81,4
C 23M			15,5	15	14,5	144	79,2	85
C 23L			18,2	17,6	17	158	92,9	91

Notes: N/A: Not Available
Voltage acceptable tolerance +/-10%
Tolerance on speed as per EN 60034-1
* This motor is certified IIC

Output Data

SICME ORANGE1 DC motors C Series are not suitable for direct starting.
In case of power supply by battery, a 2-steps starting resistance must be connected in series with the armature circuit, in order to reduce the starting current values within acceptable limits.
The starting resistance must be connected during the starting phase only, and it must be disconnected once the starting phase occurred.
As an example, a scheme of motor starting with connecting-disconnecting 2-steps starting resistance is given below.
Values of starting resistances are given in the table (general information).

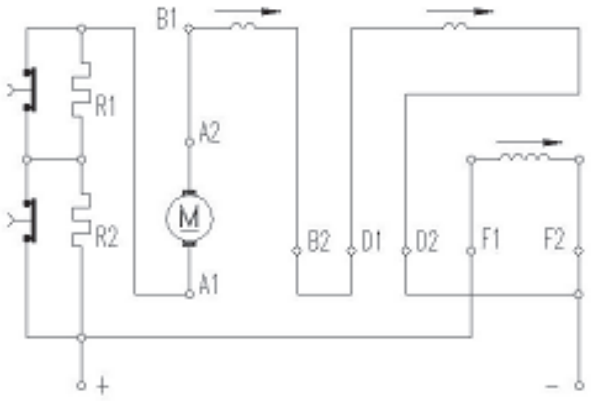

Clockwise direction of rotation

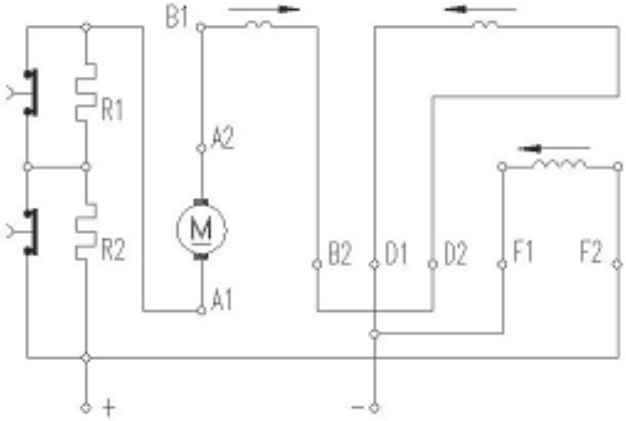

Counter-clockwise direction of rotation

R1-R2 : starting resistances
A1-A2 : armature winding
B1-B2 : commutating winding (inside the motor)

F1-F2 : field winding
D1-D2 : stabilizing series

General Information

Nominal torque at 40°C [Nm]	Starting resistances [Ω]			Armat. Resist. [Ω]	Rotor PD2 [kgm²]	Weight [kg]	Noise level [dBA]*	Protection Degree	
	Amb. Temp.	110Vdc	125Vdc					IIB	IIC
C 7L	50°C	2,5+2,5	3+3	2,5	0,015	55	80	IP55	IP55
C 7CL	40°C	2,2+2,2	2,6+2,6						
C 11S	50°C	1,4+1,4	1,65+1,65	0,9	0,075	116	80	IP55	N/A
	40°C	1,25+1,25	1,5+1,5						
C 11M	50°C	1,2+1,2	1,4+1,4	0,54	0,085	122	80	IP55	N/A
	40°C	1,1+1,1	1,3+1,3						
C 11L	50°C	1,0+1,0	1,2+1,2	0,39	0,1	130	80	IP55	N/A
	40°C	0,95+0,95	1,1+1,1						
C 13S	50°C	0,96+0,96	1,1+1,1	0,237	0,21	170	80	IP55	N/A
	40°C	0,90+0,90	1,05+1,05						
C 13M	50°C	0,80+0,80	0,96+0,96	0,209	0,25	178	80	IP55	N/A
	40°C	0,76+0,76	0,87+0,87						
C 13L	50°C	0,70+0,70	0,8+0,8	0,15	0,3	188	80	IP55	N/A
	40°C	0,65+0,65	0,75+0,75						
C 16S	50°C	0,48+0,48	0,55+0,55	0,1	0,45	210	80	IP56	N/A
	40°C	0,45+0,45	0,5+0,5						
C16M	50°C	0,37+0,37	0,42+0,42	0,059	0,5	230	80	IP56	N/A
	40°C	0,35+0,35	0,4+0,4						
C16L	50°C	0,32+0,32	0,36+0,36	0,04	0,58	265	80	IP56	N/A
	40°C	0,30+0,30	0,34+0,34						
C19S	50°C	0,29+0,29	0,33+0,33	0,043	1	370	80	IP56	N/A
	40°C	0,27+0,27	0,31+0,31						
C19M	50°C	0,24+0,24	0,28+0,28	0,03	1,1	395	80	IP56	N/A
	40°C	0,23+0,23	0,26+0,26						
C 19L	50°C	0,22+0,22	0,25+0,25	0,02	1,3	420	80	IP56	N/A
	40°C	0,20+0,20	0,23+0,23						
C 23S	50°C	0,20+0,20	0,22+0,22	0,021	2,6	580	80	IP55	N/A
	40°C	0,18+0,18	0,21+0,21						
C 23M	50°C	0,16+0,16	0,18+0,18	0,013	2,9	635	80	IP55	N/A
	40°C	0,15+0,15	0,17+0,17						
C 23L	50°C	0,14+0,14	0,16+0,16	0,011	3,4	675	80	IP55	N/A
	40°C	0,13+0,13	0,15+0,15						

*Note Tolerance +3 –0 dB(A)

Dimensions – Foot & flange mounted motor Horizontal B34 (IM2101) or B35 (IM2001) Vertical V15 (IM2011)

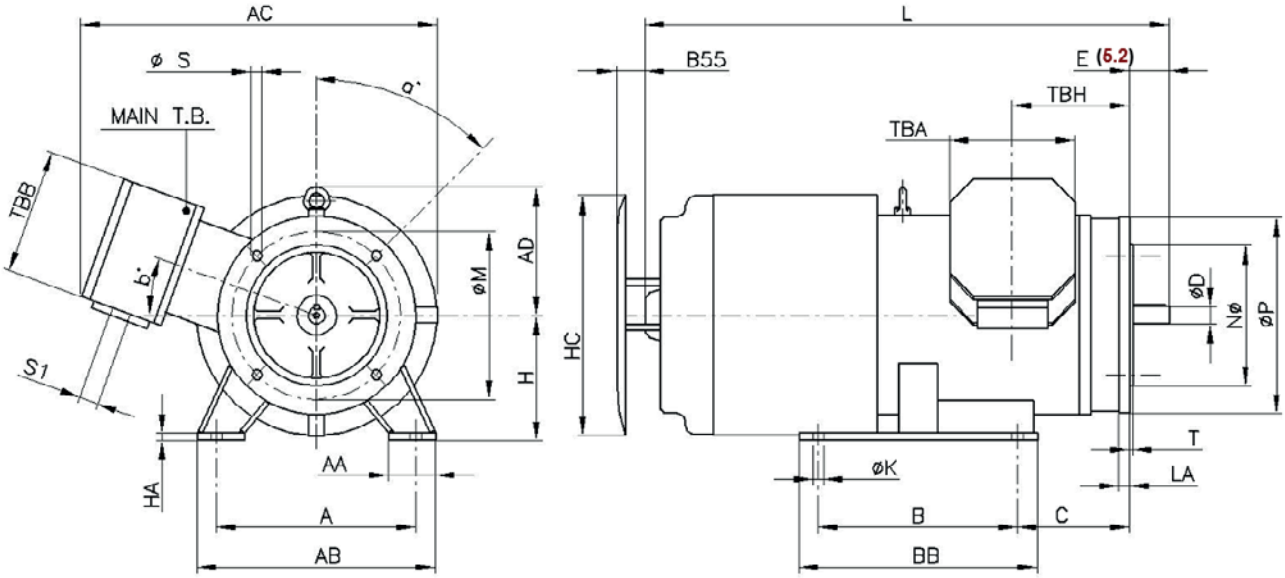

B34 (IM2101): **Flange with screwed holes**
B35 (IM 2001): **Flange with through holes**
5.2 This dimension corresponds to shaft extension too

Dimensions – Foot mounted motor – Horizontal B3 (IM1001) or V5 (IM1011)

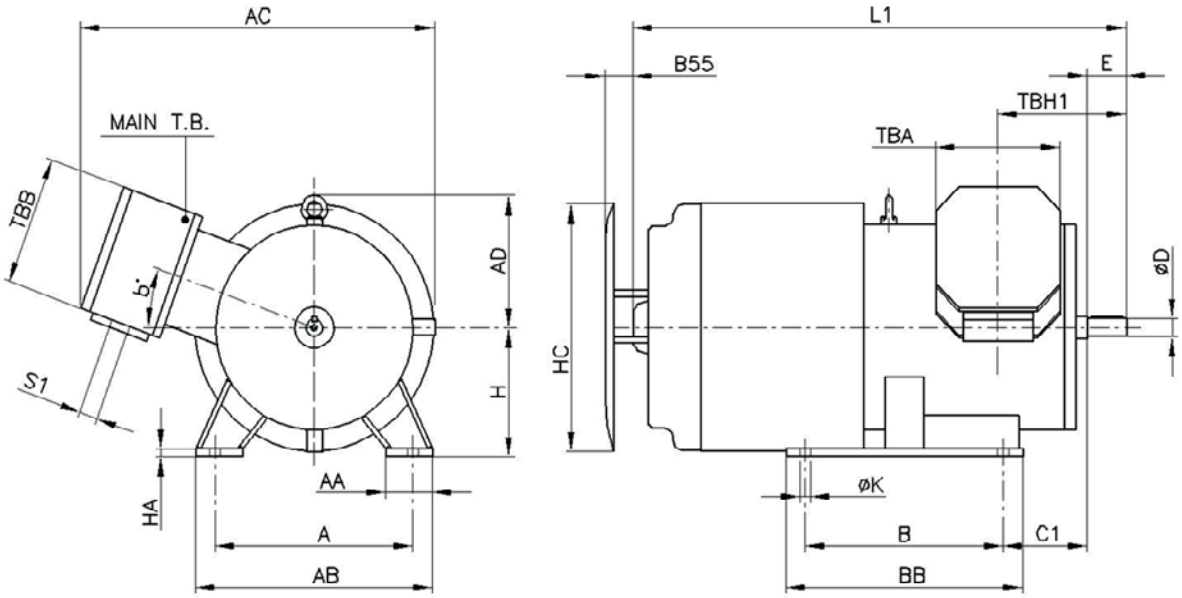

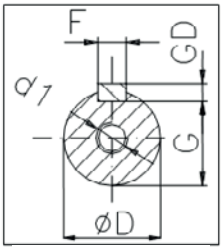

SHAFTSECTION

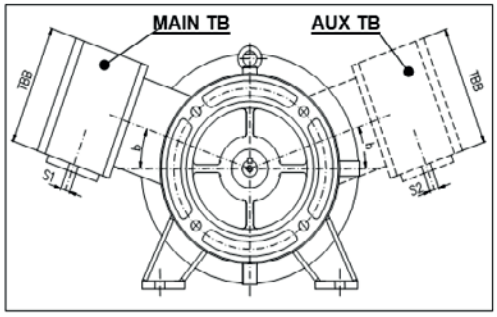

AUX TB POSITION FOR C11 to C19
(if requested by purchase order)

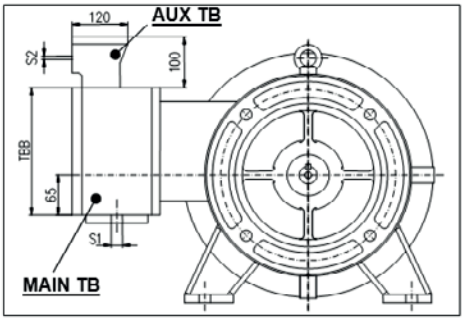

AUX TB POSITION FOR C 23
(if requested by purchase order)

Dimensions – Flange mounted motor Horizontal B5 (IM3101) or Vertical V1 (IM3001)

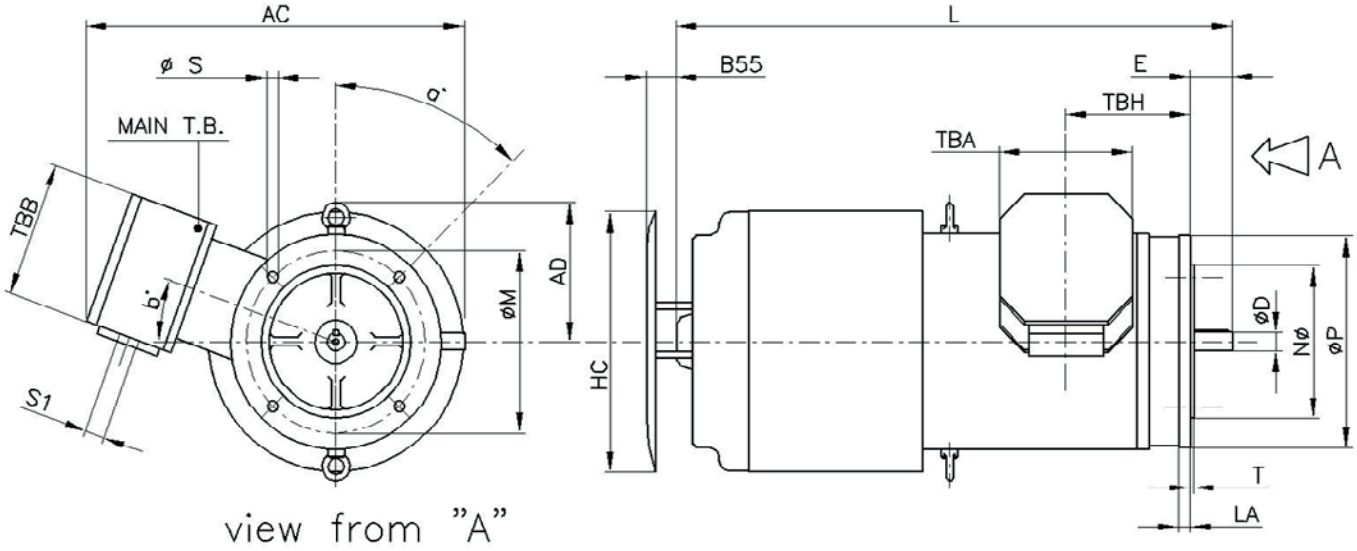

Main Dimensions

Motor type		Dimensions [mm]												
		A	AA	AB	AC	AD	B	BB	C	C1	H	HA	HC	Ø K
C7 / C7 C	L	165	57	241	347	122	140	175	74	N.A.	117	5	224	10
C 11	S	254	60	304	455	164	178	228	143	108	160	10	325	14
	M						210	260						
	L						254	304						
C 13	S	279	70	337	498	164	203	249	152	121	180	12	375	14
	M						241	287						
	L						279	325						
C 16	S	318	70	382	542	250	228	278	163	133	212	22	465	18
	M						267	317						
	L						305	355						
C 19	S	356	90	446	685	243	286	346	176	149	225	18	485	18
	M						311	371						
	L						356	416						
C 23	S	457	120	545	722	273	368	440	190	190	280	22	580	22
	M						419	491						
	L						457	529						

Motor type		Dimensions [mm]											
		L	L1	S1 (6.1)		S2 (6.1)		Ø D	d1 (DIN332)	E	F (h9)	G	GD (h11)
				Tapered	Cyl-metric	Tapered	Cyl-metric						
C7 / C7 C	L	540	540	NPT 1 ½"	20x1,5	N/A	N/A	19,05 j6	M6X16	62	4,57	16,43	4,57
C 11	S	620	580	NPT 2"	50x1,5	NPT 2"	M20x1,5	22 j6	M8X19	50	6	18.5	6
	M	645	605										
	L	675	635										
C 13	S	721	685					28 j6	M10X22	60	8	24	7
	M	751	715										
	L	786	750										
C 16	S	810	775					32 k6	M12X28	80	10	27	8
	M	845	810										7
	L	885	850										8
C 19	S	872	840	NPT 2½"	75x1,5	NPT 2½"		48 k6	M16X36	110	14	42,5	9
	M	912	880										
	L	957	925										
C 23	S	1145	1145			N/A	M25x1,5	60 m6	M20X42	140	18	53	11
	M	1190	1190										
	L	1245	1245										

Note (6.1) Tapered / Cyl.-Metric

Flange & Terminal Box Dimensions

Frame Size	FF flange dimensions [mm]									B55	TBH	TBA	TBB	TBH 1	b
	Fl. Size	LA	M	N	P	T	S	A	Holes N.						
C 7 / C 7C	N.A.	15	149	114,31 j6	172	3	3/8" UNC	45°	8	-	132	140	140	132	22,5°
C 11	FF-215	14	215	180 j6	250	4	14	45°	4	50	150	160	160	115	20°
C 13	FF-265	14	265	230 j6	300	4	14	45°	4	52	142	160	160	111	15°
C 16	FF-300	15	300	250 j6	350	5	19	45°	4	58	138	160	160	108	20°
C 19	FF-300	13	300	250 j6	350	5	19	45°	4	55	188	260	260	161	15°
C 23	FF-500	22	500	450 j6	550	5	19	22,5°	8	73	246	260	260	246	-

Bearings and lubrication

Frame Size	Bearing type		TBA	TBB		TBH 1	
	Drive End	Non-Drive End	Grease type	Grease q.ty [g]		Bearing re-greasing intervals [h]	
				DE	NDE	DE	NDE
C 7 / C 7C	6204-2Z-C3	6203-2Z-C3	Lithium grade III	Greased for life		Greased for life	
C 11	6205-2Z-C3	6205-2Z-C3					
C 13	6307-2Z-C3	6306-2Z-C3					
C 16	6308-2Z-C3	6307-2Z-C3					
C 19	6310-2Z-C3	6308-2Z-C3					
C 23	NU313-C3	6310-2Z-C3		30	20	6500	7000

Bearings radial load

Motor Type	Speed [rpm]	Only axial load A "push to the motor" For horizontal or vertical axis motor [kN]	Only axial load B "pull from the motor" For horizontal or vertical axis motor [kN]	Only radial load C For horizontal or vertical axis motor [kN]	
				distance X [mm]	applicable load [kN]
C 7 / C 7 C	500	0	1,0	20 / 40	1,0 / 0,65
	1000	0	1,0	20 / 40	1,0 / 0,65
	1500	0	0,8	20 / 40	0,9 / 0,65
	2000	0	0,7	20 / 40	0,85 / 0,65
	2500	0	0,65	20 / 40	0,75 / 0,45
	3000	0	0,6	20 / 40	0,70 / 0,45
	3500	0	0,55	20 / 40	0,70 / 0,45
C11	500	0	1,4	25 / 50	1,35 / 1,3
	1000	0	1,0	25 / 50	1,05 / 1,0
	1500	0	0,85	25 / 50	0,9 / 0,85
	2000	0	0,75	25 / 50	0,8 / 0,75
	2500	0	0,7	25 / 50	0,75 / 0,70
	3000	0	0,65	25 / 50	0,70 / 0,65
C13	500	0	2,45	30 / 60	3,4 / 3,25
	1000	0	1,85	30 / 60	2,6 / 1,5
	1500	0	1,55	30 / 60	2,3 / 1,4
	2000	0	1,35	30 / 60	2,0 / 1,4
	2500	0	1,25	30 / 60	1,9 / 1,3
	3000	0	1,15	30 / 60	1,4 / 0,75
C16	500	0	3	40 / 80	3,9 / 3,7
	1000	0	2,1	40 / 80	3,0 / 1,5
	1500	0	1,8	40 / 80	2,6 / 1,5
	2000	0	1,6	40 / 80	2,4 / 1,6
	2500	0	1,4	40 / 80	1,55 / 1,0
	3000	0	1,3	40 / 80	1,0 / 0,5
	3600	0	1,2	40 / 80	1,0 / 0,5
C19	500	0	4,5	55 / 110	6,0 / 5,6
	1000	0	3,3	55 / 110	4,8 / 3,85
	1500	0	2,8	55 / 110	4,1 / 3,85
	2000	0	2,5	55 / 110	3,7 / 3,4
	2500	0	2,2	55 / 110	3,4 / 3,2
	3000	0	2,1	55 / 110	3,2 /3,0
	3200	0	2	55 / 110	3,1 / 2,9
C23	500	4,3	4,3	70 / 140	25 / 24
	1000	3,2	3,2	70 / 140	11/6,65
	1500	2,7	2,7	70 / 140	10,5/6,25
	2000	2,3	2,3	70 / 140	9,1/5,5
	2500	2,1	2,1	70 / 140	5,5/3,5

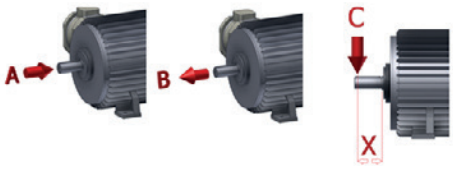

ATEX 2014/34/UE Directive (offprint)

The ATEX Directive 2014/34/UE applies to all mechanical and electrical products used in areas, with both gas and dusty ambient, with a potential explosion risk.
The Directive provides for the issuance of dual certificate:
• The conformity of the prototype
• The conformity of production (evaluation of the quality management system).
The ATEX marking is COMPULSORY for all products that will be installed in potentially explosive areas within countries belonging to the European Union

Warnings for the plant engineer

Due the complexity and importance of the matter, is suggested that plant engineer which have to tackle a project that includes hazardous areas refer to IEC 60079 "Standard for atmosphere explosives."
2014/34/UE defines that: 'explosive atmosphere' means a mixture with air, under atmospheric conditions, of flammable substances in the form of gases, vapours, mists or dusts in which, after ignition has occurred, combustion spreads to the entire unburned mixture;
(not always, however, in the presence of dust, the entire quantity of dust is consumed by combustion).
OUR MOTORS C SERIES ARE MADE FOR AMBIENT ONLY FOR PRESENCE OF GAS NOT FOR DUST!
An atmosphere which could become explosive due to local conditions is defined as potentially explosive atmosphere, and it is only this kind of atmosphere that is intended for products covered by the ATEX Directive 2014/34/UE.
When one or more of above elements is not present, the atmosphere is no longer considered "potentially explosive".
The local authorities (fire departments, the National Inspectorate) are the competent bodies to be approached for a classification approval of a potentially explosive area.

Warnings for the user

The Flameproof explosion DC motors must be serviced regularly as per the operating and maintenance manual supplied by SICME ORANGE1.
In addition, we do not forget that these machines must be able to work safely in hazardous areas, even after being subjected to maintenance operation.
Is therefore indispensable to be aware, that if the motors are in any way altered without the prior written permission of SICME ORANGE1, they lose the fundamental characteristics that makes them suitable for installation in hazardous environments and for which them were designed, built and certified.
In this case, they are no longer be classified as explosion-proof and all the symbols of identification (Ex d, II B, T4, etc..) must be removed.

Notes:

Customers can determine whether a specific product is suitable for their needs and are thus responsible for the selection, use and results obtained by any product showed in this catalogue.
The information contained in the present catalogue does not guarantee the characteristics for the use.
The products listed in this catalogue are exclusively designed and built for industrial purpose.
For particular cases of NON-industrial environments, or where other types of protection must be provided (for example against contact with children fingers, etc.), these additional protections must be realized by the customer.
Any non-observance of the rules for installation, use and maintenance or any modification/tampering with the motor makes the guarantee invalid and exempts SICME ORANGE1 from any responsibility.
All data and indications shown in this catalogue have to be considered only as a guideline.
Any differently use of the motor from the specifications indicated in this catalogue does not involve any liability for SICME ORANGE1 as manufacturer.
SICME ORANGE1 reserves the right to modify at any time and without notice the data, the technical characteristics, the dimensions, the weights and the illustrations.
SICME ORANGE1 refuses all responsibility for direct or indirect damages caused by possible errors and/or omissions in the present catalogue.
The reproduction, even in part, of the present catalogue must be authorized in writing by SICME ORANGE1.

WARNING ⚠
The motors and the electrical devices that supply them are electrical components installed on machines and industrial systems subject to high voltage.
During operation, these components can be dangerous since they are live and have non-insulated and rotating parts.
Therefore, they can be extremely harmful to personnel and objects if the instructions for the installation, use and the maintenance are not respected.
The motors are always equipped with the installation, use and maintenance instruction manual.
Is always necessary read and understand all the information contained in the manual before proceeding to connect and to start up the installation.
If the above documentation is lacking, please request a copy to SICME ORANGE1.

CAUTION ⚠
All information, data and drawings given in this catalogue are purely indicative and may be changed without prior notice.
SICME ORANGE1 shall not be responsible if the products illustrated here are used outside limits of the specifications given.

This is a translation of certificate N. IT17/0947

SGS

The quality management system of

SICME MOTORI S.r.l.

Head Office:
Strada del Francese, 130 - 10156 TORINO - Italy

Operation Unit:
Strada del Francese, 123 - 10156 TORINO - Italy

has been assessed and certified as meeting the requirements of

ISO 9001 / UNI EN ISO 9001:2015

For the following activities

Design, production, sales and service of direct current motors and generators alternate current, permanent magnets synchronous, reluctance, rail traction and auxiliary.

EA Sector: 19, 29

This certificate is valid from 20/11/2017 until 20/11/2020 and remains valid subject to satisfactory surveillance audits.
Re certification audit due before 05/11/2020.
Issue.1. Certified since 20/11/2017.

The audit leading to this certificate commenced on 08/11/2017

Authorized by
Paola Santarelli

SGS ITALIA S.p.A.
Via Caldera, 21 - 20153 MILANO - Italy
t + 39 02 73 93 1 f +39 02 70 10 94 89 www.sgs.com

Page 1 of 1

This document is issued by the Company subject to its General Conditions of Certification Services accessible at www.sgs.com/terms_and_conditions.htm. Attention is drawn to the limitations of liability, indemnification and jurisdictional issues established therein. The authenticity of this document may be verified at http://www.sgs.com/en/certified-clients-and-products/certified-client-directory. Any unauthorized alteration, forgery or falsification of the content or appearance of this document is unlawful and offenders may be prosecuted to the fullest extent of the law.

IECEx Certificate of Conformity

INTERNATIONAL ELECTROTECHNICAL COMMISSION
IEC Certification System for Explosive Atmospheres
for rules and details of the IECEx Scheme visit www.iecex.com

Certificate No.:	**IECEx EPS 15.0048**	Page 1 of 4	Certificate history: Issue 0 (2015-09-12)
Status:	**Current**	Issue No: 1	
Date of Issue:	2020-06-22		
Applicant:	**SICME ORANGE1 SRL** P.zza della Repubblica n.28 20124 Milano Italy		
Equipment:	**D.C. motors type C7, C7C, C11, C13, C16, C19, C23**		
Optional accessory:			
Type of Protection:	**db**		
Marking:	Ex db IIB T4 Gb Ex db IIC T4 Gb (only C7C)		

Approved for issue on behalf of the IECEx Certification Body: **Holger Schaffer**

Position: **Certification manager**

Signature: (for printed version)

Date: 2020-06-22

1. This certificate and schedule may only be reproduced in full.
2. This certificate is not transferable and remains the property of the issuing body.
3. The Status and authenticity of this certificate may be verified by visiting www.iecex.com or use of this QR Code.

Certificate issued by:

Bureau Veritas Consumer Products Services Germany GmbH
Businesspark A95
86842 Türkheim
Germany

---

1 **CERTIFICATO DI ESAME CE DEL TIPO**
EC TYPE EXAMINATION CERTIFICATE

2 Apparecchiature o sistemi di protezione destinati ad essere utilizzati in atmosfera potenzialmente esplosiva **Direttiva 94/9/CE**

Equipment or protective system intended for use in potentially explosive atmospheres **Directive 94/9/EC**

3 Numero di certificato esame CE del tipo:

BVI 15 ATEX 0061 X

EC – type examination certificate number:

BVI 15 ATEX 0061 X

4 Apparecchiatura: **motori elettrici c.c.**
Tipo/Serie: **Serie C, modelli C7-C7C-C11-C13-C16-C19-C23**

Equipment: **d.c. electric motors**
Type/Series: **Series C, models C7-C7C-C11-C13-C16-C19-C23**

5 Fabbricante **SICMEMOTORI s.r.l**

Manufacturer **SICMEMOTORI s.r.l**

6 Indirizzo **Strada del Francese, 130 – 10156 TORINO (ITALIA)**

Address **Strada del Francese, 130 – 10156 TURIN (ITALY)**

7 Questa apparecchiatura o sistema di protezione e le sue eventuali varianti accettate sono descritte nell'allegato al presente certificato e nei documenti descrittivi pure riportati in esso.

This equipment or protective system and any acceptable variation thereto is specified in the schedule to this certificate and therein referred to.

8 BUREAU VERITAS ITALIA S.p.A., (di seguito BVI), Organismo Notificato n° 1370 in conformità all'articolo 9 della Direttiva 94/9/CE del Parlamento e del Consiglio dell'Unione Europea del 23 Marzo 1994, certifica che questa apparecchiatura o sistema di protezione è in conformità ai Requisiti Essenziali di Sicurezza e Salute per il progetto e la costruzione di apparecchiature e sistemi di protezione destinati ad essere utilizzati in atmosfere potenzialmente esplosive, definiti nell'Allegato II della Direttiva.
Le verifiche ed i risultati di prova sono registrati nel rapporto di valutazione tecnica confidenziale G10050/15/FMmc e nel rapporto di prova DE/EPS/ExTR15.0050/00 emesso da Bureau Veritas Consumer Product Services GmbH.

BUREAU VERITAS ITALIA S.p.A.,(as follows BVI), Notified Body n° 1370 in accordance with article 9 of the Directive 94/9/CE of the European Parliament and Council of the 23 March 1994, certifies that the equipment or protective system has been found to comply with the essential Health and Safety Requirements relating to the design and construction of equipment and protective system intended for use in potentially explosive atmosphere, given in Annex II of the Directive.
The examination and tests results are recorded in confidential technical evaluation report G10050/15/FMmc, and in the test report No. DE/EPS/ExTR15.0050/00 issued by Bureau Veritas Consumer Product Services GmbH.

9 La conformità ai Requisiti Essenziali di salute e Sicurezza viene assicurata per mezzo della conformità alle norme:

- EN 60079-0 (2012) + A11:2013, EN 60079-1 (2007)

Compliance with the Essential Health and Safety Requirements has been assured by compliance with:

- EN 60079-0 (2012) + A11:2013, EN 60079-1 (2007)

10 Il simbolo X posto dopo il numero del certificato indica che l'apparecchiatura o il sistema di protezione è soggetto a condizioni speciali per un utilizzo sicuro specificato nell'allegato di questo certificato.

If the sign X is placed after the certificate number, it indicates that the equipment or protective system is subject to a special conditions for safe use specified in the schedule to this certificate.

11 Questo certificato di esame CE del tipo è relativo soltanto al progetto, all'esame ed alle prove dell'apparecchiatura o sistema di protezione specificato in accordo con la Direttiva 94/9/CE. Ulteriori requisiti di questa direttiva si applicano al processo di produzione e fornitura dell'apparecchiatura o sistema di protezione.
Questi requisiti non sono oggetto del presente certificato.

This EC Type examination certificate relates only to the design and construction of this specified equipment or protective system in accordance with the Directive 94/9/EC. A further requirement of the Directive applies to the manufacture and supply of this equipment or protective system.
These requirements are not covered by this certificate.

12 L'apparecchiatura o sistema di protezione deve includere i seguenti contrassegni:

The marking of the equipment or protective system shall include the following:

Ex II 2G Ex d IIB or IIC T4 Gb
(T_{amb}: -20++60)°C

Milano, 12 Ottobre 2015
Milan, October 12th 2015

Emesso da (Issued by):
F. Modena

G10051/15/FMmc IT File 15.2123585.138
Il Presente documento non può essere riprodotto parzialmente se non con l'approvazione scritta di Bureau Veritas Italia.
The present document shall not be reproduced, except in full, without Bureau Veritas Italia approval.

Page 1/4

Bureau Veritas Italia SpA - Via Miramare, 15 - 20126 Milano

www.bureauveritas.it
All. III PE

ЕВРАЗИЙСКИЙ ЭКОНОМИЧЕСКИЙ СОЮЗ

СЕРТИФИКАТ СООТВЕТСТВИЯ

ЕАС

№ ЕАЭС RU C-IT.HA65.B.00478/20
Серия RU № 0215062

ОРГАН ПО СЕРТИФИКАЦИИ продукции Общества с ограниченной ответственностью «ТехБезопасность» (ОС ООО «ТехБезопасность»).Адрес места нахождения юридического лица: 127486, Россия, город Москва, улица Двулинская, дом 1, корпус 2, этаж 3, помещение 1, комната 19. Адреса мест осуществления деятельности в области аккредитации: 105066, Россия, город Москва, улица Нижняя Красносельская, дом 35, строение 64, комната 22 "а"; 301668, Россия, Тульская область, город Новомосковск, улица Ордженикидзе, дом 8 пристроенное нежилое здание – пристройка к цеху № 3, 3 этаж, помещение 4 и помещение 10. Номер аттестата аккредитации (регистрационный номер) RA.RU.11HA65. Дата внесения в реестр сведений о аккредитованном лице - 10.08.2018. Телефон: +74952081646, адрес электронной почты: tzbbez@inbox.ru

ЗАЯВИТЕЛЬ
Общество с ограниченной ответственностью «Гостнорм» Основной государственный регистрационный номер: 1082315002747. Место нахождения (адрес юридического лица): 353907, Россия, Краснодарский край, город Новороссийск, Анапское шоссе, 15, офис 112. Адрес места осуществления деятельности: 353900, Россия, Краснодарский край, город Новороссийск, улица Новороссийской Республики, 14А, офис 25. Телефон: +78617625966, адрес электронной почты: gostnorm@mail.ru

ИЗГОТОВИТЕЛЬ
SICME ORANGE1 S.r.l.
Место нахождения (адрес юридического лица): Piazza della Repubblica,28 - 20124 Milano (MI), Италия.
Адрес места осуществления деятельности по изготовлению продукции: Strada del Francese 126-130, 10156 Torino (TO), Италия.

ПРОДУКЦИЯ
Взрывозащищенные электродвигатели постоянного тока серии С. Маркировка взрывозащиты и иные сведения о продукции, обеспечивающие ее идентификацию, приведены на листах 1 и 2 приложения (бланки №№ 0725017, 0725018). Серийный выпуск.

КОД ТН ВЭД ЕАЭС 8501 31 000 0, 8501 32 000 0

СООТВЕТСТВУЕТ ТРЕБОВАНИЯМ Технического регламента Таможенного союза «О безопасности оборудования для работы во взрывоопасных средах» (ТР ТС 012/2011)

СЕРТИФИКАТ СООТВЕТСТВИЯ ВЫДАН НА ОСНОВАНИИ
Протокола испытаний № 0265-ИИ-01 от 20.09.2019 года Испытательной лаборатории взрывозащищенного оборудования Общества с ограниченной ответственностью "ТЕХБЕЗОПАСНОСТЬ", аттестат аккредитации RA.RU.21ИВ54 от 26.03.2018. Акта анализа состояния производства № 0265-АСП от 22.05.2019. Технической документации изготовителя согласно листу 2 приложения (бланк № 0725018). Схема сертификации 1с.

ДОПОЛНИТЕЛЬНАЯ ИНФОРМАЦИЯ
Стандарты и иные нормативные документы, применяемые при подтверждении соответствия, приведены на листе 3 приложения (бланк № 0725019). Условия хранения - в закрытом, чистом и сухом помещении при температуре от минус 50 °С до плюс 100 °С. Срок хранения - не более 36 месяцев. Срок службы (годности) - 20 лет.

СРОК ДЕЙСТВИЯ С 20.02.2020 **ПО** 19.09.2024
ВКЛЮЧИТЕЛЬНО

Руководитель (уполномоченное лицо) органа по сертификации — подпись — Шевелев Антон Андреевич (Ф.И.О.)

М.П.

Эксперт (эксперт-аудитор) (эксперты (эксперты-аудиторы)) — подпись — Прокмарев Михаил Валерьевич (Ф.И.О.)

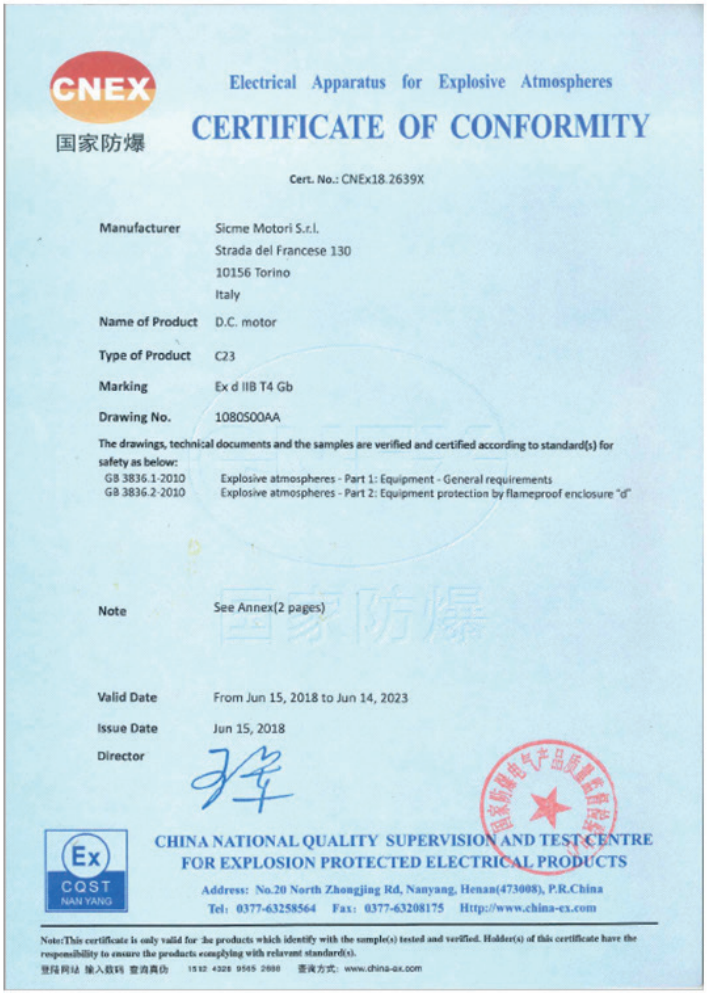

CNEX 国家防爆

Electrical Apparatus for Explosive Atmospheres

CERTIFICATE OF CONFORMITY

Cert. No.: CNEx18.2639X

Manufacturer	Sicme Motori S.r.l. Strada del Francese 130 10156 Torino Italy
Name of Product	D.C. motor
Type of Product	C23
Marking	Ex d IIB T4 Gb
Drawing No.	1080S00AA

The drawings, technical documents and the samples are verified and certified according to standard(s) for safety as below:

GB 3836.1-2010 Explosive atmospheres - Part 1: Equipment - General requirements
GB 3836.2-2010 Explosive atmospheres - Part 2: Equipment protection by flameproof enclosure "d"

Note	See Annex(2 pages)
Valid Date	From Jun 15, 2018 to Jun 14, 2023
Issue Date	Jun 15, 2018
Director	

Ex CQST NAN YANG

CHINA NATIONAL QUALITY SUPERVISION AND TEST CENTRE FOR EXPLOSION PROTECTED ELECTRICAL PRODUCTS

Address: No.20 North Zhongjing Rd, Nanyang, Henan(473008), P.R.China
Tel: 0377-63258564 Fax: 0377-63208175 Http://www.china-ex.com

Note:This certificate is only valid for the products which identify with the sample(s) tested and verified. Holder(s) of this certificate have the responsibility to ensure the products complying with relavant standard(s).
登陆网站 输入数码 查询真伪 1512 4328 9565 2680 查询方式: www.china-ex.com

CNEX 国家防爆

Electrical Apparatus for Explosive Atmospheres

CERTIFICATE OF CONFORMITY

Cert. No.: CNEx19.2490X

Manufacturer	Sicme Motori S.r.l. Strada del Francese 130 10156 Torino Italy
Name of Product	D.C. motor
Type of Product	C16
Marking	Ex d IIB T4 Gb
Drawing No.	U1060S00AA

The drawings, technical documents and the samples are verified and certified according to standard(s) for safety as below:

GB 3836.1-2010 Explosive atmospheres - Part 1: Equipment - General requirements
GB 3836.2-2010 Explosive atmospheres - Part 2: Equipment protection by flameproof enclosure "d"

Note	See Annex(2 pages)
Valid Date	From June 18, 2019 to June 17, 2024
Issue Date	June 18, 2019
Director	

Ex CQST NAN YANG

CHINA NATIONAL QUALITY SUPERVISION AND TEST CENTRE FOR EXPLOSION PROTECTED ELECTRICAL PRODUCTS

Address: No.20 North Zhongjing Rd, Nanyang, Henan(473008), P.R.China
Tel: 0377-63258564 Fax: 0377-63208175 Http://www.china-ex.com

Note:This certificate is only valid for the products which identify with the sample(s) tested and verified. Holder(s) of this certificate have the responsibility to ensure the products complying with relavant standard(s).
登陆网站 输入数码 查询真伪 5939 7004 7705 6529 查询方式: www.china-ex.com

ORANGE1
HOLDING

SICME ORANGE1 S.r.l.
Montebello Vicentino - HQ
Via del Lavoro 7
36054 - Montebello Vicentino
(VI) Italy
Tel: 02 8002 6000

Torino Plant
Str. del Francese 130
10156 - Torino
(TO) Italy
Tel: 011 407 6311

info@orange1.eu
www.orange1.eu

#03 - 03/2024

ORANGE1 ELECTRIC MOTORS · ORANGE1 FOUNDRY · ORANGE1 PRECISION · ORANGE1 HUNGARY · SICME ORANGE1