SICME | ORANGE1

Antriebe Neumann GmbH
Parkstrasse 50 • 61231 Bad Nauheim

Tel.: 06032 - 6079383
Fax: 06032 - 6079384
info@neumann-antriebe.de
www.neumann-antriebe.de

RA Series

DC MOTORS FOR INDUSTRIAL APPLICATIONS

Frames 80 - 800 / from 0.5 to 2500 kW

C-RA80-800-IE-17-R01

Member of ORANGE1 HOLDING

ORANGE1 HOLDING

A dynamic, strong and ambitious Group

Orange1 Holding is an international renown Group, one of the most important European manufacturers of single-phase and three-phase asynchronous electric motors. It has an annual capacity of more than 1 million motors and 5 million electric stators. The group, established in 1971 by Leone Donazzan, chaired today by his son Armando Donazzan, is strongly focused on technological innovation, performance and customization to meet individual clients requirements.

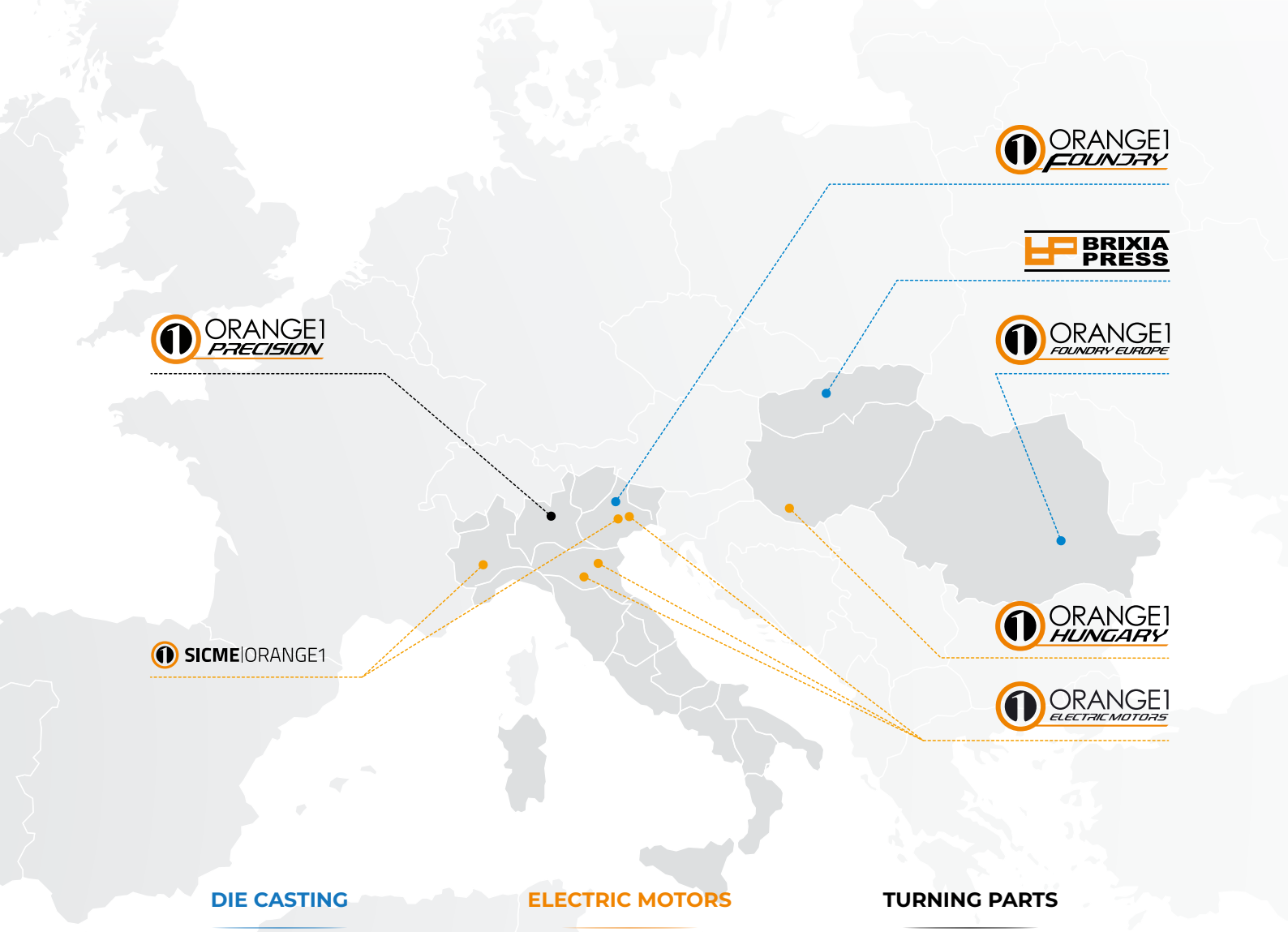

DIE CASTING **ELECTRIC MOTORS** **TURNING PARTS**

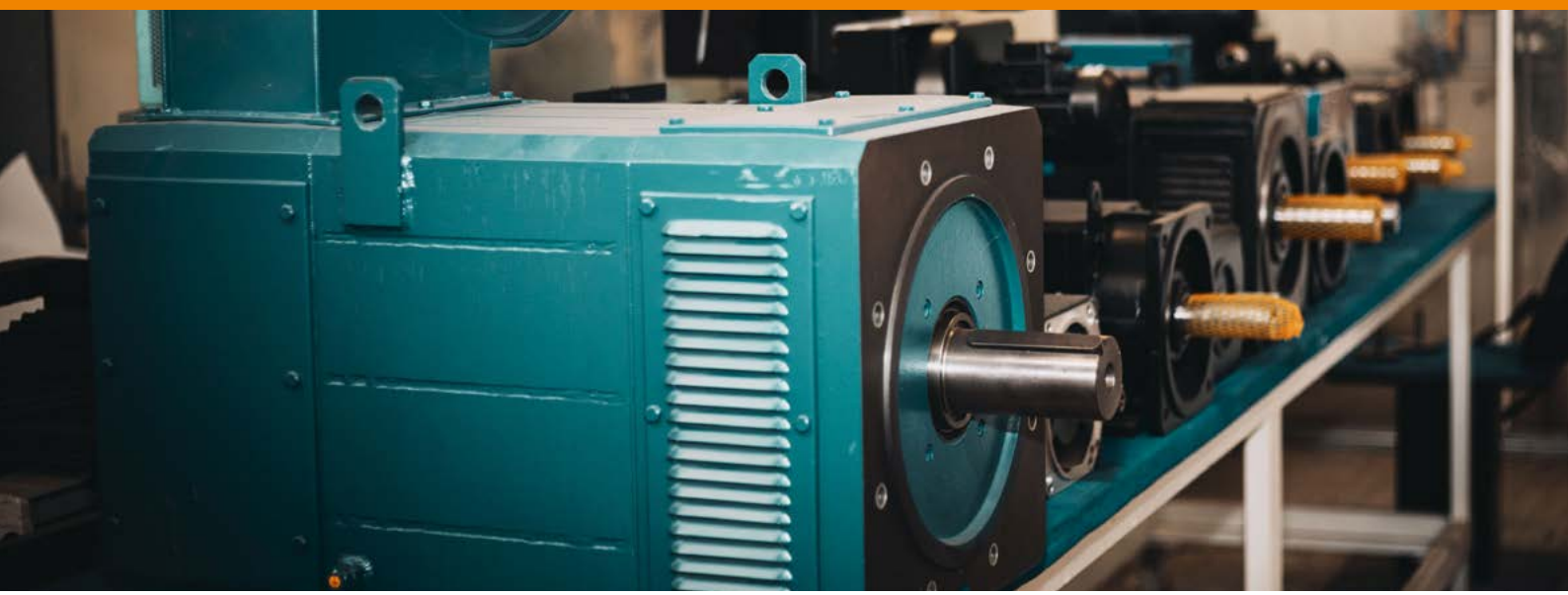

SICME | ORANGE1

Sicme Orange1 has born from the merge of Sicme Motori and Magnetic.
Sicme Motori, founded in 1967, produces high quality DC motors and it represents a benchmark of excellence for its technology providing the best economical solutions for many different applications. Since 2002 it has been cooperating actively with the Institute of Electrical Engineering of the Polytechnic of Turin and it has been one of the world's largest producers of wind generators. In 2008, it has developed motors with ASR technology, the most revolutionary type of electric machine in the world, and in 2014 developed an innovative range of synchronous reluctance motors IE4 with a specific patent. A company with a 40 years history, well-known around the world for the high quality and product technology, it produces Asynchronous motors up to 1500 kW, Synchronous motors up to 1500 kW, Hydroelectric Generators up to 1500 kW, Mini-Wind generators up to 200 kW and Wind Turbines up to 1500 kW. Magnetic Motors, founded in 1973, manufactures electrical machines specifically designed to be used for variable speed application. The company is located in Montebello Vicentino, Vicenza – Italy.

PRODUCTION PLANTS

LOCATION	MOTORS PRODUCTION
MONTEBELLO VIC.NO - ITALY 36054 (VI) Via del Lavoro 7	AC VECTORIAL MOTORS DC MOTORS BRUSHLESS MOTORS TORQUE MOTORS
TORINO - ITALY 10156 (TO) Strada del Francese 130	AC VARIABLE SPEED MOTORS DC MOTORS GENERATORS SERVICE RELUCTANCE MOTORS

INDUSTRY FOCUS

- Electric motors for Machine Manufacturers
- Customized products for OEMs and END USERS
- More than 85% of our products are exported by direct and indirects sales
- Operating in more than 70 countries worldwide
- Ever-expanding Sales and After Sales wordwide network
- Service for Electric Motors

STRENGTHS

- **MADE IN ITALY**
- **RELIABILITY & DURABILITY**
- **CUSTOMER CARE**
- **SERVICE**
- **HIGH LEVEL OF CUSTOMIZATION**
- **WIDE RANGE OF MOTORS**
- **SHORT TIME OF DELIVERY**
- **APPLICATIONS KNOW-HOW**
- **COMMITTED TO THE SUCCESS OF OUR CUSTOMERS**

APPLICATIONS

- **CABLE TRANSPORT**
- **MACHINE TOOLS**
- **SHEET METAL WORKING MACHINES**
- **PLASTIC EXTRUDERS**
- **BLOW MOULDING MACHINES**
- **PRESSES**
- **AMUSEMENT RIDES**
- **WOVEN WIRE MANUFACTURING**
- **THREAD/CABLE MANUFACTURING**
- **CONVERTING**
- **STEEL/COPPER CABLE WORKING**
- **BOARD WORKING MACHINES**

#WEAREPASSION

We look to the future, to anticipate customers' needs.

Soul, Heart and Brain striving to create real value to our customers and to ourselves. Our motto is "We Are Passion" to win the most passionate challenge: anticipate customers' needs. With its mission the company creates real value to the customers by considering their perspectives and meeting their expectations. Orange1 Holding defines itself as a "Manufacturer of Solutions". How to ride through time? Orange1 moves with the time acting without hesitation in order to be constantly at the cutting edge of development in its sector.

RESEARCH & DEVELOPMENT

The R&D Department is a strategic advantage for the Group.

The design and development of new products is a crucial factor in such a changing industrial society considering the technological innovations and the competitors. Corporate strategies and choices are extensive technological research, desire to emerge and a high level of originality. Orange1 products suit customers and market needs despite the high level of personalization. The launch of a new product is the conclusion of a thorough market analysis. By focusing on the flexibility and efficiency Orange1 Group responds to customers' demands designing customized models for special applications. This has allowed a notable technological and production development.

A TEAM OF 26 SPECIALIZED DESIGNER
High technical skill and competence centers for mechanical and electromagnetic design.

STANDARDS AND CERTIFICATIONS

The Group is certified ISO 9001:2015

Orange1 always commits to implementing the existing standards and strives to maintain high levels in service and quality. To increase customer satisfaction, Orange1 has acquired the following certification in order to meet the requirements for each country:

General Description

D.C. Motors for Industrial Applications - RA series

This catalogue gives the technical information about D.C. motors for industrial applications RA Series, frames 80-800 mm shaft height.

Designation of the motors (example)	
RA	Motor series
280	Shaft height (mm)
K	K with compensating winding – N without
M	Core length
6	Selection code for length definition
PVA	Type of cooling
B3	Mounting arrangement

Validity of the catalogue

Information given in this catalogue is of a purely indicative nature and may be changed without prior notice. The producer shall not be held responsible if the products illustrated herein are used outside the limits of the specifications given.

Reserved property

This document and its contents are the sole property of ORANGE1. They may not be reproduced either wholly or in part, nor shown, referred to or in any way transmitted to other persons without express written permission by ORANGE1

Warranty

All the products described are warranted according to our General Terms of Supply. The duration of the warranty is one year from the date of delivery or of notice that goods are ready, unless agreed otherwise. Warranty and sales support are regulated by instructions given by our General Terms of Supply and our ISO9001-2015 Quality System.

Motors and generators

All machines can in general be used both as motors and as d.c. generators. Performance ratings given in the technical catalogues refer to use as variable speed motors connected to three-phase, fully-controlled bridge (6 or 12 thyristors). The performance ratings concerning use as generator will be given upon request.

Clockwise and counter-clockwise rotation

All RA machines are suitable for either clockwise or counter-clockwise rotation without adjustment (as the brushes are radial), and they are generally tuned in the Test Room for this operating condition. In special cases, when the direction of rotation is defined, upon request, Test Room tuning can be carried out for one direction only.

Reference Standards

SICME|ORANGE1

IEC	CEI	
60034-1	**EN 60034-1**	Rating and performance
60034-2	**EN 60034-2**	Methods for determining losses and efficiency
60034-5	**EN 60034-5**	Classification of the degrees of protection
60034-6	**EN 60034-6**	Methods of cooling (IC code)
60034-7	**EN 60034-7**	Type of construction and mounting arrangements (IM code)
60034-8	**EN 60034-8**	Terminal markings and direction of rotation
60034-9	**EN 60034-9**	Noise limits
60034-14	**EN 60034-14**	Mechanical vibrations of rotating machines
60072-1	**60072-1**	Dimensions and output powers for rotating machines
61293	**61293**	Markings of electrical devices
UNI ISO 2768/1-2		General tolerances
LVD 2014/35/EU		Low voltage directive
EMC 2014/30/EU		Electromagnetic compatibility directive
2006/42/EU		Machine directive
RoHS3 2011/65/EU: Art.3 /1, All. 1/ 6		Directive on hazardous substances

CSA Certification

RA machines with framesizes 200 and higher are approved and certified as meeting the Standards of the Canadian Standards Association, and they are therefore allowed to bear the CSA brand. The certification number is LR77401.

Constructional Features

IEC 60034-1 Standards

Fully laminated frame

Insulation class F up to framesize 180

Insulation class H from framesize 200 and higher

Frames 80, 90,100 are 2 poles machines, others (larger frames) are 4 poles
Frames 80 to 160 have no compensating winding

Frame 180 has compensated winding. Frames 200 and larger ones have compensating winding.
Frames 200 and 225 are available also without compensating windings

Balancing A degree (ISO2373) with half key

Monolitic brush up to framesize 180

Twin brushes from framesize 200 and higher

Constant pressure brush-holders

Terminal box RHS viewed from DE for all sizes, but 80, 90 and 100 which have it on top

Vacuum Pressure Impregnation

Bearings

Bearings normally specified for the machines in this catalogue are rolling bearings, ball or roller. All bearings for the motors with frame-sizes 132 and bigger have oversized clearance C3. DE ball bearings are available for direct coupling without (with very limited) radial load.

Frames 80-180
Standard arrangement uses ball bearings on both DE and NDE, grease lubricated for "life",
totally shielded on both sides (2Z type).

Frame 200
Standard arrangement uses ball bearings on both DE and NDE, grease lubricated, with ball nipple and drainage of used grease, single shield (Z type).
DE roller bearings are available for coupling with pulley and belt with high radial load.

Frames 225-800
Standard arrangement uses ball bearing on NDE and roller bearing on DE, grease lubricated,
with ball nipple and drainage of used grease.

The recommended lubrication intervals and the amount of grease to be used are given on the data plate. To define the lubrication programme, complete grease changing and the replacement of the bearings, please act in strict compliance with the Instructions for Installation, Use and Maintenance.

Framesize	DE bearing		NDE bearing	
	Ball bearing	Roller bearing	Type	
80	6305 2Z	NU305	Ball	6305 2Z
90	6206 2Z	NU 206	Ball	6305 2Z
100	6307 2Z	NU 307	Ball	6305 2Z
112	6308 2Z	NU 308	Ball	6305 2Z
132	6310-2Z-C3	NU 310	Ball	6310-2Z-C3
160	6312-2Z-C3	NU 312	Ball	6310-2Z-C3
180	6313-2Z-C3	NU 313 ECP	Ball	6311-2Z-C3
200	6314-Z-C3	NU 314-C3	Ball	6314-Z-C3
225	On request	NU2218-C3	Ball	6315-C3
250	On request	NU2220-C3	Ball	6318-C3
280	On request	NU2220-C3	Ball	6318-C3
315	On request	NU321-C3	Ball	6321-C3
355	On request	NU324-C3	Ball	6324-C3
400	On request	NU228-C3	Ball	6228-C3
450KRS-S	On request	NU230-C3	Ball	6230-C3
450KSM-X	On request	NU232-C3	Ball	6232-C3

NOTE: For larger motors, please ask to our sales organization.

Maximum admissible radial loads

We report here below the maximum radial load for the motors in this catalogue, evaluated for bearings lasting 20,000 hours and the stack length "P" for the motors frames 80 to 180 and "L" for the bigger framesizes. For other conditions, please contact our sales force.

The formula for the evaluation of these loads is here below, for which calculation the torque is required. It can be found in the section about performance of the motors.

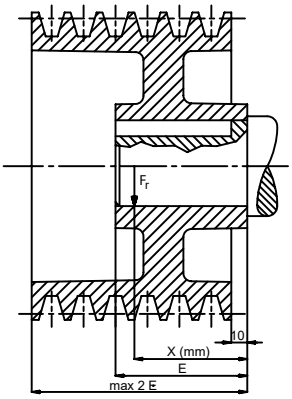

$$Fr = 2040 \times \frac{C}{D} \times k$$

where:
Fr radial load in [N]
C motor torque in [Nm]
D pulley diameter in [mm]
k tensile factor specified by pulley manufacurer and corrisponding about to:
k=1 for toothed belts
k=2.3 for trapeizodal belts
k=3.8 for flat belts

Frame size	X (mm)	Speed (rpm)							
		600	1000	1200	1500	2000	2500	3000	3500
80	20	1490	1490	1490	1370	1200	1100	1040	960
	40	980	980	980	980	980	980	980	920
90	20	1550	1240	1160	1050	900	820	770	700
	60	1380	1100	1030	920	800	720	670	620
100	40	3050	2590	2390	2230	2010	1860	1740	1600
	80	2870	2430	2250	2090	1890	1750	1640	1500
112	40	3350	2670	2550	2350	2070	1920	1780	1720
	80		2600	2480	2280	2000	1850	1720	1610
132	40	4800	3900	3700	3300	2900	2600	2400	2300
	80	4400	3600	3300	3000	2600	2300	2200	2100
160	60	7070	5820	5470	5000	4450	4060	3840	3620
	110	6100	5450	5120	4700	4170	3800	3600	3300
180	35	7430	5920	5510	4950	4430	3810	3550	3270
	70	7170	5720	5320	4780	4270	3680	3430	3160
	105	6930	5520	5140	4620	4130	3560	3310	3270
200	70	9090	7470	6850	6370	5680	5180	4800	---
	140	7900	7010	6400	5980	5320	4860	4500	---
225	85	25000	23000	16800	20500	18000	17000	16000	---
	170	15000						13000	
250	85	32000			28000	26000	24000	---	---
	70	20000					18000	---	---
280	85	24000					---	---	---
	170	15000					---	---	---
315	105	12000					---	---	---
	210	80000					---	---	---

NOTE: For larger motors, please ask to our sales organization.

Frames 80-200 are available with DE roller bearing too, which allow a higher radial load Fr; in that case, admissible radial load Fr is shown in the following table

Frame size	X (mm)	Speed (rpm)							
		600	1000	1200	1500	2000	2500	3000	3500
80	20	980	980	980	980	980	980	980	980
	40	1490	1490	1490	1490	1490	1490	1490	1490
90	20	2380	1950	1850	1700	1530	1420	1330	1250
	60				1520	1350	1250	1170	1100
100	40	3050	2590	2390	2230	2010	1860	1740	1600
	80	2870	2430	2250	2090	1890	1750	1640	1500
112	20	6520	5450	5200	4800	4450	3950	3850	3600
	40						3650	3500	3300
132	40		7600	7200	6800	6100	5600	5200	5000
	80				6200	5600	5100	4800	4600
160	60	9600	9600	9600	9600	9600	8670	8250	7900
	110	6100	6100	6100	6100	6100	6100	6100	6100
180	35	14400	14400	14400	14400	14400	12900	12300	11700
	105	7540	7540	7540	7540	7540	7540	7540	7540
200	70	15700					15150	14280	---
	140	7900							---

NOTE: For larger motors, please ask to our sales organization.

Forms of constructions and mounting arrangements IM

The standard solution is IM 1001 mounting form (B3 according to UNEL 05513). Most of the forms of construction and mounting IM described in IEC Standards 60034-7 are available; following table shows the most common ones. For other forms of construction, please ask our sales. Second shaft end is also available on request (in this case the last number is 2: example IM1002).

UNEL 05513	IEC 34-7	Schematic outline	UNEL 05513	IEC 34-7	Schematic outline
B3	IM 1001	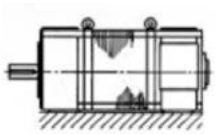	V1	IM 3011	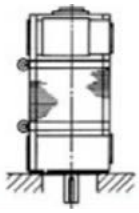
B5	IM 3001	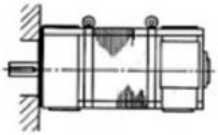	V5	IM 1011	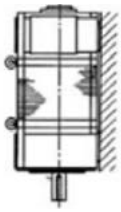
B35	IM 2001	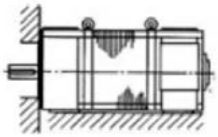	V35	IM 2031	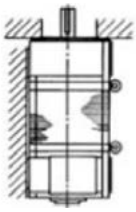
B6	IM 1051	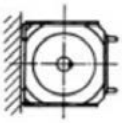	V6	IM 1031	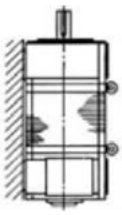
B7	IM 1061	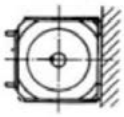	V3	IM 3031	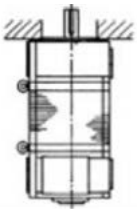
B8	IM 1071	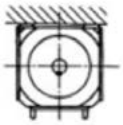	V15	IM 2011	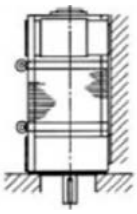

Environment

It is assumed that the environment is benign, thus:
dry, i.e. with relative humidity of the air below 75%. However, an excessively dry atmosphere (below 20% relative humidity) can cause commutating difficulty (excessive brush wear).
clean, i.e. without appreciable quantities of dust and dirt in general, suspended in the air.
free of chemical agents, i.e. without concentrations of gas or vapours that could chemically harm the copper, iron, aluminium, paints and insulation.
Our machines can also be installed in difficult environments (damp, dusty, chemically harmful, etc.) but in this case the degree of protection, method of cooling and possibly the choice of materials must be agreed upon previously.
All RA machines may be installed in environments with temperature down to −15°C and stored in environments with temperature down to −30°C.

Cooling methods IC and degrees of protection IP

RA motors can be supplied with various IC cooling methods (according to IEC 60034-6), with the IP degrees of protection (according to IEC Std. 60034-5). The different versions indicated by a specific code.

IP	IC	Description		Code
23	06	Forced ventilation by fitted fan. Suction exhaust to the local atmosphere	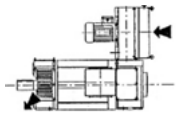	PVA
	16	Forced ventilation by fitted fan, with ducted air inlet and outlet vent to local atmosphere	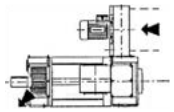	BPVA
	17	Ventilation by external system with ducted air inlet and outlet vent to local atmosphere	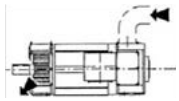	BCA
44 54 55	410	Totally enclosed not ventilated machine		CNV
	36	Force ventilation by integral system with air inlet and outlet ducts	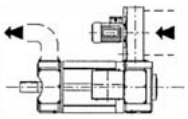	BPVAB
	37	Ventilation by external system with air inlet and outlet ducts	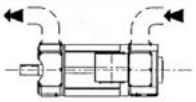	CBA
	86W	Assisted ventilation in closed cycle with air-water heat exchanger (for frames 200-800 only)	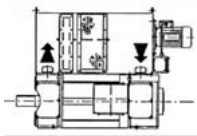	CBARH
	666	Assisted ventilation in closed cycle with air-air heat exchanger (for frames 200-800 only)	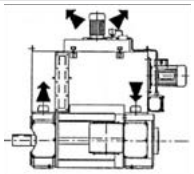	CBARO

Machines with IP54 and IP55 degree of protection are suitable for outdoor installation only if under a shed or special cover

Balancing and vibrations

SICME|ORANGE1

All the machines in this catalogue are balanced according to IEC 60034-14 class A. Balancing is carried out with the half key (therefore the half-coupling must be balanced with half key). Machines with special balancing (class B) are supplied upon request. Limits of vibration severity are given in the following table (tolerance ± 10%).
Tests are carried out with the method of free suspension or with motors on rubber.

Vibration Grade	Shaft Height (mm)	56 ≤ H ≤ 132		H ≤ 132	
	Mounting	Displacement (μm)	Velocity (mm/s)	Displacement	Velocity (mm/s)
A	Free Suspension	45	2,8	45	2,8
	Rigid Mounting	_	_	37	2,3 2,8
B	Free Suspension	18	1,1	29	1,8
	Rigid Mounting	_	_	24	1,5 1,8

Painting

We have standardized certain painting cycles, which should be chosen considering the machine operating environment. Any other cycles may be defined in agreement with the Customer when ordering.The final standard colour is green RAL6004; other colours are available upon prior agreement when ordering.

Cycle	Environment	Application
1 **(standard)**	Indoor, dry, clean, not aggressive	degreasing with spray solvent synthetic finishing coat
2 **(anticorrosive)**	Damp-salty, tropical, sea, near sea	degreasing with spray solvent epoxy coat painting 1 coat of enamel semi-gloss finishing coat minimum thickness 90 micron
3 **(anticorrosive special for aggressive environement)**	Chemically aggressive, naval	degreasing with shotblasting 2 layers of epoxy coat painting 2 layers of enamel semi-gloss finishing coat minimum thickness 130 micron
4 **(special)**		Customized

Main data plate

Main data plate is in stainless steel and it is solidly riveted to the motor frame.
Standard languages are Italian/English. Nameplate is according to IEC 60034-8.

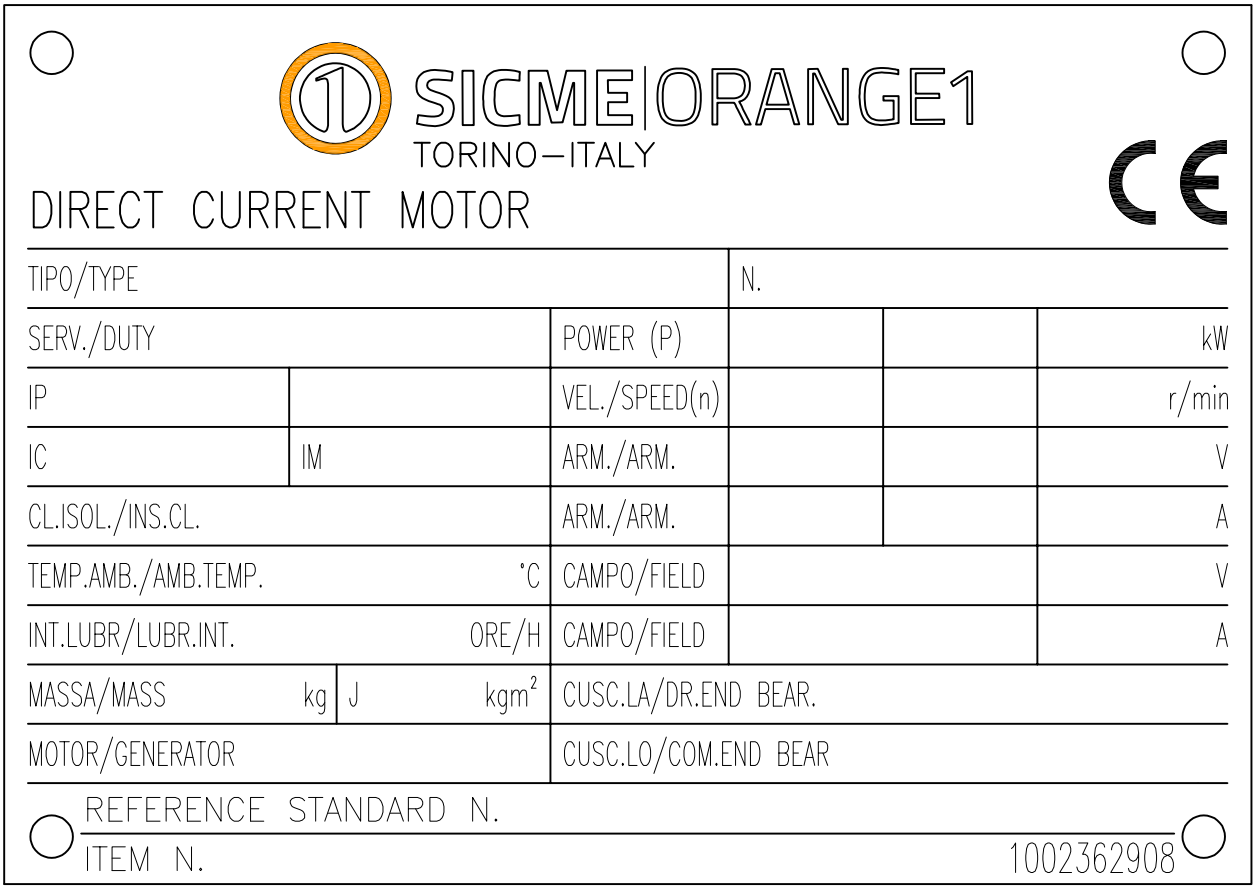

Meaning of the abbreviations

TYPE	motor type (please refer to the designation of the motors)
N	serial number
P	nominal power
SPEED	speed
ARM [V]	armature voltage
ARM [A]	armature current
FIELD [V]	field voltage
FIELD [A]	field current
MASS	motor weight
J [kgm2]	rotor moment of inertia
DUTY	duty cycle
IP	degree of protection
IC	cooling method
IM	form of construction
INS.CL	insulation class
DR.END BEAR.	drive end bearing
COM.END BEAR.	non drive end bearing

Options and accessories

SICME|ORANGE1

X	Available on request
STD	Standard
-	N.A.

Common options and accessories

Description	80-180	200-250	280-315	355-800
Klixon fitted as standard in stator windings (standard quantity)	2**	1	1	2
PTC thermistors in stator windings	X	X	X	X
Pt100 thermal detector in stator windings	-	X	X	X
Brush wear control device	X	X	X	X
Special balancing (B degree)	X	X	X	X
Balancing with half key	STD	STD	STD	STD
Special balancing with whole key	-	X	X	X
Keyless shaft	-	X	X	X
Tacho or Pulse generator provision (std type diam. 14/11)	X	STD	STD	STD
Tacho or Pulse generator provision (hollow shaft)	X	X	X	X
Speed feedback devices	X	X	X	X
Anticondensation heaters	X	X	X	X
Transparent inspection covers	X	X	X	STD
Earthing brush	-	X	X	X
Bearing vibration control sensor provision (M8 hole)	-	X	X	X
Bearing temperature control sensor (Pt100)	-	X	X	X
DE ball bearing (for direct coupling)	STD	X	X	X
Slide rails	-	X	NO	NO
Brakes (Disc, Pneumatic, Electromagnetic, Etc.)	X	X	X	X
Terminal box on Top	X	X	X	X
Terminal box LHS	X	X	X	X
Terminal box RHS	STD	X	X	X
Painting different than RAL 6011	X	X	X	X
Tropicalization	X	X	X	X
Special painting for corrosive environments	X	X	X	X
Stainless steel screws and bolts	-	X	X	X
Anchorage and foundation bolts	-	X	X	X
Tandem or Triple arrangement (engineering or supply)	-	X	X	X
Electromagnetic clutches	-	X	X	X
Adapting subframe for shaft height gap	-	X	X	X

** On frame 180 1+1 separately on terminal box

Options and accessories for IC06 cooling

Description	80-180	200-250	280-315	355-800
Blower Position on Top (NDE side)	STD	STD	STD	STD
Blower Position Left or Right	X	X	X	X
Filter	STD	STD	STD	STD
Ventilation failure detector (Pressure switch)	X	X	X	STD
Blower with special Volt / Hz	X	X	X	X
Noise reduction device	-	X	X	X
Anticondensation heaters	X	X	X	X

Options and accessories for IC86W cooling (air-water) and for IC666 cooling (air-air): please ask to our sales organization

Performance data

SICME|ORANGE1

Conditions of validity of data contained in the performance tables shown in next pages are the following:

Type of cooling IC06 - IC16 - IC17 - IC36 - IC37 - (IC86W where applicable)
Maximum ambient temperature 40 °C
Maximum altitude 1000 m.a.s.l.
Supply from three phase fully controlled bridge (max form factor of armature current 1,05)
Insulation and temperature rise class F for framesizes 80-180 , class H 200-800
Duty S1 (continuous duty)
Standard overloads
Separate excitation

Overload capacity

	Tmax	I max	Duration
IEC 60034-1	1,6 Tn	Not stated	1' occasional
Compensated machines	1,7 Tn	1,8 In	15" every 5' or 1' every 20'
NOT compensated machines	1,6 Tn	1,8 In	15" every 5' or 1' every 20'

Standstill

Corrente/Current % (*)	Durata/Duration
200	10 s
100	30 s
50	90 s
20	10 min
10	Continuous

(*) respect to the rated current

Current gradient

Motors are suitable for dynamic load dI/dt up to 200 In/s.

De-rating coefficient for conditions different than the above ones

SICME|ORANGE1

These are the coefficients that need to be used to bring the power ratings (and speed) required by the application to values compatible with the power and speed data given in this catalogue, when the type of service, ventilation, environment temperature and overtemperature differ from the standard ones above indicated. The various coefficients must be multiplied together when contemporaneous situations occur, obtaining two overall coefficients:

coefficient Kp referring to the power;
coefficient Kn referring to the speed.

To select a frame size suitable for required power/speed, the power rating to be found in this catalogue must be divided by Kp and the speed rating must be multiplied by Kn.

De-rating coefficient for different ambient temperature or altitude a.s.l.

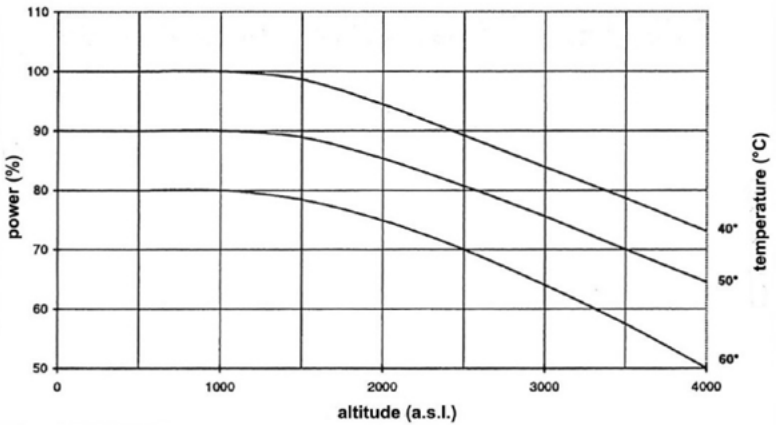

When ambient temperature is > 60°C and/or altitude is > 4000 m.a.s.l., please ask to our sales organiz.

Coefficient for different temperature rise

Delta T	Kp	Kn
Class H (125 °C)	1	1
Class F (105 °C)	0.91	0.95
Class B (80 °C)	0.8	0.89

Important remark: The Purchaser is always responsible to declare the duty; in case duty is not declared, the producer assumes that duty S1 (continuous running duty) applies. When duty is different from S1, or when sudden accelerations/decelerations/overloads are required, please ask to our sales service.

For De-rating Coefficient for IC666 and IC610 cooling methods pleas ask to our sales organiz.

Selection code for length definition

SICME|ORANGE1

Selection codes are necessary to select the right motor length on drawing. Standard selection codes are shown on the performance tables. When de-rating coefficient are used, selection codes change as shown in the following table

For framesize 710 and 800 please ask to our sales organiz.

Framesize	Motors with de-rating coefficients			
	Temperature rise class F		Temperature rise class B IC610 and IC666 motors	
Compensated machines	Number of Winding	Selection code	Number of winding	Selection code
80-90	All	1	All	1
100-160	All	2	All	2
180	All	3	All	3
200	All	4	All	4
225	All	5	All	5
250	All	5	All	5
280	All	6	All	6
315	All	8 6	All	6
355	42-44 45-54	7 6	All	6
400	42-45 46-54	7 6	All	6
450-630	41-44 45-58	8 6	All	6

Table for the choice of the motor

SICME|ORANGE1

To select the correct motor, please detect it in the tables here below the torque and speed range according to your application. Thus, please check the technical tables ("technical catalogues") in the download area in our website: **www.sicmemotori.com** and **www.orange1.eu**.

For framesize 500 to 800 please ask to our sales organiz.

Motor	Standard voltage values on the catalogue [V]						Min, max speed [rpm]	Torque (min, max) [Nm]
RA80NS	160V	220V	260V	330V	400V	440V	630-3680	10,6-10,6
RA80NM	160V	220V	260V	330V	400V	440V	630-3660	13,6-13,3
RA80NP	160V	220V	260V	330V	400V	440V	660-3450	18,8-18,6
RA90NM	160V	220V	260V	330V	400V	440V	860-3860	22-21,1
RA90NP	160V	220V	260V	330V	400V	440V	830-3910	31,1-28,1
RA100NM	160V	220V	260V	330V	400V	440V	660-3460	37,6-36,7
RA100NP	160V	220V	260V	330V	400V	440V	610-3470	52,8-52
RA112NS	160V	220V	260V	330V	400V	440V	630-3550	60,6-56
RA112NM	160V	220V	260V	330V	400V	440V	610-3480	72-68,4
RA112NL	160V	220V	260V	330V	400V	440V	610-3550	100-85,3
RA132NS	160V	220V	260V	330V	400V	440V	670-3630	114-113
RA132NM	160V	220V	260V	330V	400V	440V	660-3550	144-131
RA132NL	160V	220V	260V	330V	400V	440V	680-3610	170-155
RA132NP	160V	220V	260V	330V	400V	440V	710-3430	195-181
RA160NS	220V	260V	330V	400V	440V	520V	650-3200	209-188
RA160NM	220V	260V	330V	400V	440V	520V	660-3240	263-243
RA160NL	220V	260V	330V	400V	440V	520V	650-2820	322-307
RA160NP	220V	260V	330V	400V	440V	520V	650-2330	379-366
RA180KS	220V	260V	330V	400V	440V	520V	330-3220	455-324
RA180KM	220V	260V	330V	400V	440V	520V	330-3270	544-382
RA180KL	220V	260V	330V	400V	440V	520V	280-3250	631-447
RA180KP	220V	260V	330V	400V	440V	520V	310-2810	697-560
RA200NS	400 V	440 V	460 V	520 V	600 V	-	890-3388	595-773
RA200NM	400 V	440 V	460 V	520 V	600 V	-	890-3104	746-981
RA200NL	400 V	440 V	460 V	520 V	600 V	-	685-2828	949-1004
RA200NX	400 V	440 V	460 V	520 V	600 V	-	601-2506	1067-1129
RA200NY	400 V	440 V	460 V	520 V	600 V	-	534-2248	1190-1254
RA200KS	400 V	440 V	460 V	520 V	600 V	-	963-3055	559-735
RA200KM	400 V	440 V	460 V	520 V	600 V	-	870-3243	704-911
RA200KL	400 V	440 V	460 V	520 V	600 V	-	742-2862	894-937
RA200KX	400 V	440 V	460 V	520 V	600 V	-	651-2536	1006-1054
RA200KY	400 V	440 V	460 V	520 V	600 V	-	578-2275	1121-1170
RA225NS	400 V	440 V	460 V	520 V	600 V	-	600-2245	1308-1344
RA225NM	400 V	440 V	460 V	520 V	600 V	-	527-1990	1476-1512
RA225NL	400 V	440 V	460 V	520 V	600 V	-	469-1785	1641-1679
RA225NP	400 V	440 V	460 V	520 V	600 V	-	413-1588	1839-1882
RA225NX	400 V	440 V	460 V	520 V	600 V	-	361-1405	2072-2124

Table for the choice of the motor

SICME|ORANGE1

Motor	Standard voltage values on the catalogue [V]						Min, max speed [rpm]	Torque (min, max) [Nm]
RA225KS	400 V	440 V	460 V	520 V	600 V	-	565-2547	1447-1498
RA225KM	400 V	440 V	460 V	520 V	600 V	-	496-2258	1632-1687
RA225KL	400 V	440 V	460 V	520 V	600 V	-	441-2027	1814-1876
RA225KP	400 V	440 V	460 V	520 V	600 V	-	388-1804	2033-2104
RA225KX	400 V	440 V	460 V	520 V	600 V	-	339-1597	2292-2364
RA250KS	400 V	440 V	460 V	520 V	600 V	-	631-2158	1951-2205
RA250KM	400 V	440 V	460 V	520 V	600 V	-	563-1938	2168-2450
RA250KL	400 V	440 V	460 V	520 V	600 V	-	498-1725	2169-2750
RA250KP	400 V	440 V	460 V	520 V	600 V	-	441-1543	2716-3056
RA250KX	400 V	440 V	460 V	520 V	600 V	-	395-1396	2996-3380
RA280KS	400 V	440 V	460 V	520 V	600 V	-	511-1736	3249-3311
RA280KM	400 V	440 V	460 V	520 V	600 V	-	452-1546	3651-3713
RA280KL	400 V	440 V	460 V	520 V	600 V	-	398-1370	4106-4184
RA280KP	400 V	440 V	460 V	520 V	600 V	-	349-1211	4634-4726
RA315KS	400 V	440 V	460 V	520 V	600 V	-	503-1586	4353-4616
RA315KM	400 V	440 V	460 V	520 V	600 V	-	446-1412	4883-5181
RA315KL	400 V	440 V	460 V	520 V	600 V	-	392-1251	5499-5835
RA315KP	400 V	440 V	460 V	520 V	600 V	-	344-1107	6203-6574
RA355KR	400 V	440 V	460 V	520 V	600 V	-	660-1539	4847-5125
RA355KS	400 V	440 V	460 V	520 V	600 V	-	522-1226	6074-6425
RA355KM	400 V	440 V	460 V	520 V	600 V	-	463-1092	6810-7200
RA355KL	400 V	440 V	460 V	520 V	600 V	-	408-967	7673-8111
RA355KX	400 V	440 V	460 V	520 V	600 V	-	359-855	8654-9149
RA400KR	400 V	440 V	460 V	520 V	600 V	700 V	434-1373	5106-6057
RA400KS	400 V	440 V	460 V	520 V	600 V	700 V	337-1142	6398-7594
RA400KM	400 V	440 V	460 V	520 V	600 V	700 V	301-1030	7181-8470
RA400KL	400 V	440 V	460 V	520 V	600 V	700 V	313-922	7953-9430
RA400KX	400 V	440 V	460 V	520 V	600 V	700 V	317-816	8975-10600
RA450KRS	400 V	440 V	460 V	520 V	600 V	700 V	373-1442	5546-6019
RA450KRM	400 V	440 V	460 V	520 V	600 V	700 V	329-1343	6254-6787
RA450KR	400 V	440 V	460 V	520 V	600 V	700 V	292-1198	6998-7591
RA450KS	400 V	440 V	460 V	520 V	600 V	700 V	288-1063	7865-8546
RA450KSM	400 V	440 V	460 V	520 V	600 V	700 V	287-1007	8722-9531
RA450KM	400 V	440 V	460 V	520 V	600 V	700 V	285-897	9753-10649
RA450KML	400 V	440 V	460 V	520 V	600 V	700 V	287-798	10394-11933
RA450KL	400 V	440 V	460 V	520 V	600 V	700 V	254-709	12299-13355
RA450KX	400 V	440 V	460 V	520 V	600 V	700 V	223-627	13875-15102

Table for the choice of the motor

SICME|ORANGE1

Type	Max speed [rpm]	Field power [W]	Inertia [kg*m2]	Noise [dBA]	Weight IC06 [kg]
RA80NS	4000	200	0,0056	71	35
RA80NM	4000	225	0,0077	71	40
RA80NP	4000	275	0,0142	71	50
RA90NM	4000	255	0,0124	71	65
RA90NP	4000	310	0,0247	71	78
RA100NM	4000	360	0,029	73	84
RA100NP	4000	430	0,039	73	72
RA112NS	4000	350	0,055	73	108
RA112NM	4000	400	0,067	73	94
RA112NL	4000	420	0,095	73	113
RA132NS	4000	720	0,08	75	149
RA132NM	4000	770	0,114	75	166
RA132NL	4000	820	0,16	75	184
RA132NP	4000	910	0,214	75	203
RA160NS	4000	900	0,23	78	235
RA160NM	4000	1060	0,28	78	265
RA160NL	4000	1220	0,34	78	295
RA160NP	4000	1390	0,4	78	330
RA180NS	3700	1250	0,52	80	380
RA180NM	3700	1420	0,61	80	420
RA180NL	3700	1590	0,7	80	460
RA180NP	3700	1750	0,79	80	495
RA200KS	3400	1400	0,8	83	490
RA200KM	3400	1700	0,92	83	555
RA200KL	3200	1900	1,05	83	640
RA200KX	2800	2100	1,2	83	690
RA200KY	2800	2500	1,37	83	750
RA200NS	3400	1600	0,8	83	490
RA200NM	3400	1900	0,92	83	555
RA200NL	3200	2300	1,05	83	640
RA200NX	2800	2600	1,2	83	690
RA200NY	2800	2600	1,37	83	750
RA225NS	3000	2600	2	83	910
RA225NM	3000	2700	2,15	83	970
RA225NL	3000	2900	2,3	83	1030
RA225NP	2800	3000	2,5	83	1095
RA225NX	2800	3300	2,6	83	1160

Table for the choice of the motor

SICME|ORANGE1

Type	Max speed [rpm]	Field power [W]	Inertia [kg*m2]	Noise [dBA]	Weight IC06 [kg]
RA225KS	3000	2000	2	83	910
RA225KM	3000	2200	2,15	83	970
RA225KL	3000	2450	2,3	83	1030
RA225KP	2800	2650	2,5	83	1095
RA225KX	2800	2800	2,6	83	1160
RA250KS	2800	2500	3,65	84	1200
RA250KM	2800	2700	3,9	84	1275
RA250KL	2800	2900	4,2	84	1365
RA250KP	2800	3100	4,5	84	1460
RA250KX	2600	3300	4,9	84	1565
RA280KS	2600	3100	5,05	84	1665
RA280KM	2600	3500	5,45	84	1785
RA280KL	2600	3700	5,9	84	1925
RA280KP	2400	4000	6,4	84	2075
RA315KS	2400	3200	10	85	2155
RA315KM	2400	3700	10,8	85	2305
RA315KL	2400	4200	11,7	85	2480
RA315KP	2200	4500	12,6	85	2670
RA355KR	2200	3800	14,5	85	2615
RA355KS	2200	4100	15,6	85	2930
RA355KM	2200	4300	16,8	85	3120
RA355KL	2200	4500	18,1	85	3345
RA355KX	2200	5000	19,6	85	3590
RA400KR	2000	4800	24,8	85	3375
RA400KS	2000	5000	27	85	3740
RA400KM	2000	5300	29	85	3960
RA400KL	2000	5600	31,3	85	4240
RA400KX	2000	5900	33,8	85	4540
RA450KRS	1800	4200	38,2	85	3700
RA450KRM	1800	4400	40,5	85	3900
RA450KR	1800	4600	43,2	85	4120
RA450KS	1800	5000	46,2	85	4360
RA450KSM	1800	5200	49,2	85	4670
RA450KM	1800	5400	52,7	85	4970
RA450KML	1800	5600	56,7	85	5320
RA450KL	1800	5800	61,2	85	5720
RA450KX	1800	6000	66	85	6160

SICME | ORANGE1

TECHNICAL DRAWING & DIMENSIONS

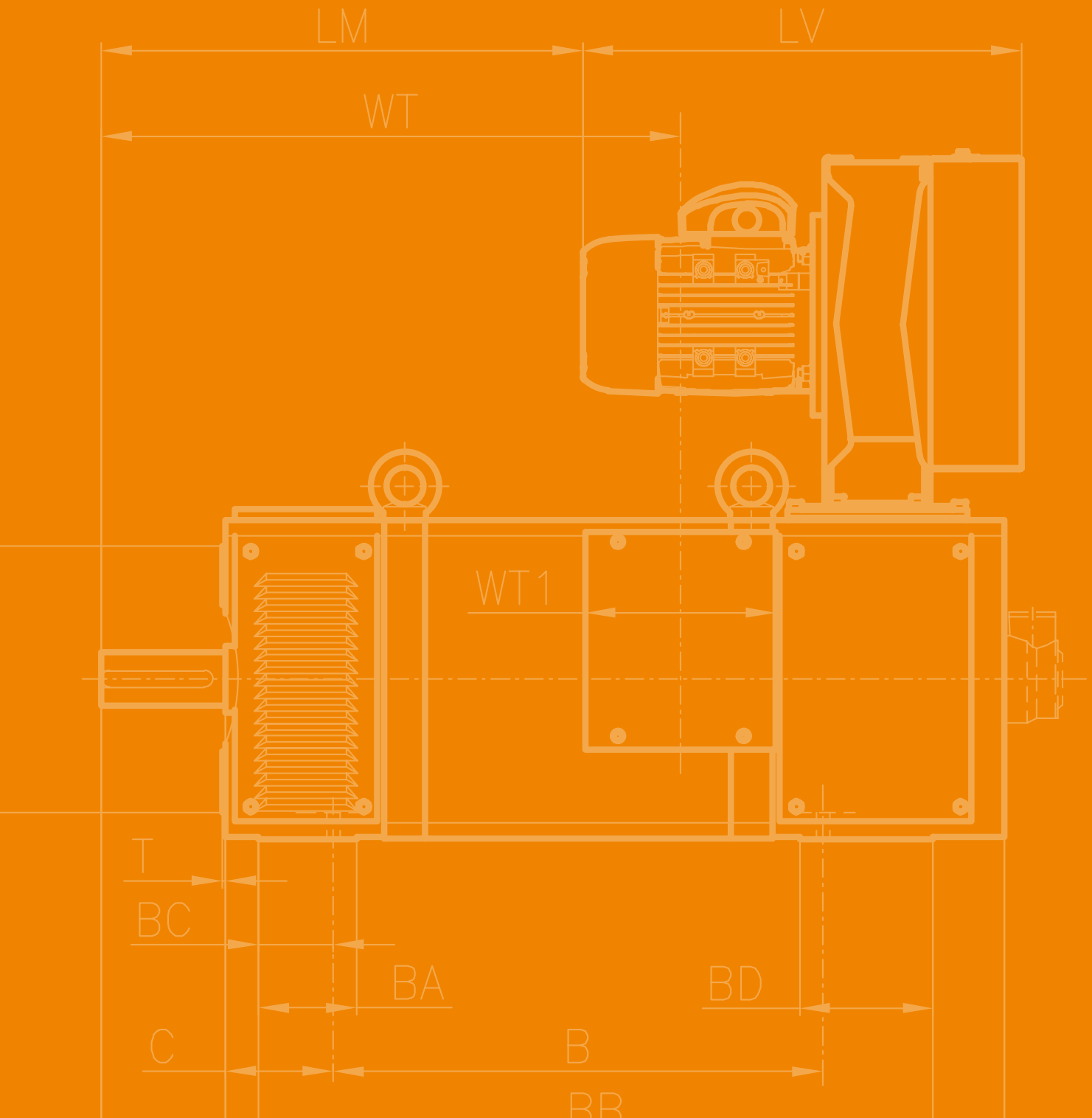

Dimensional drawings

IC06 (PVA) RA80-RA100

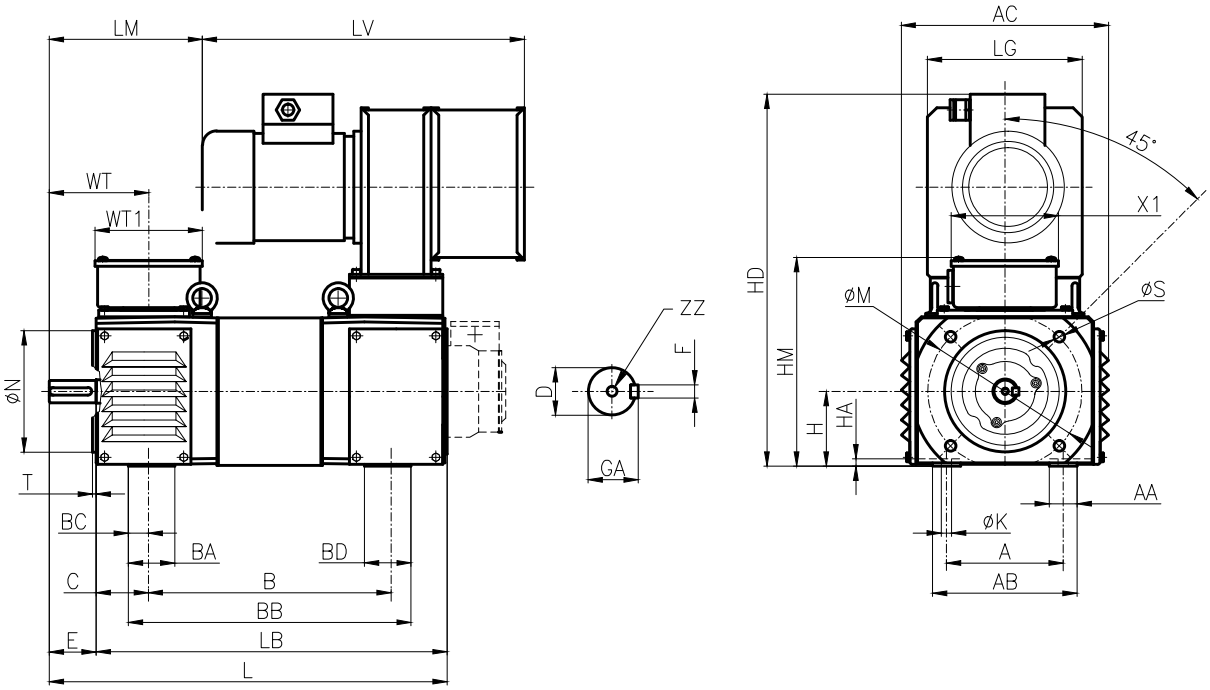

FRAME	D	E	C	GA	F	B	BA	BB	BC	BD	L	LB	LM	LV	WT	WT1	H
RA 80NS	Ø 24 k6 with key	50	56	27	8h9	235	50	278	21,5	50	401	351	139	345	106.5	115	80 0/-0.5
RA 80NM		50	56	27	8h9	260	50	303	21,5	50	426	376	164	345	106.5	115	
RA 80NP		50	56	27	8h9	310	50	353	21,5	50	476	426	214	345	106.5	115	
RA 90NM	Ø 28 k6 with key	60	56	31	8h9	280	50	321	20,5	50	456	396	175	332	119	115	90 0/-0.5
RA 90NP		60	56	31	8h9	340	50	381	20,5	50	516	456	235	332	119	115	
RA 100NM	Ø 32 k6 with key	80	63	35	10h9	295	89,5	391	63	75	520	440	229	355	144	131	100 0/-0.5
RA 100NP		80	63	35	10h9	355	89,5	451	63	75	580	500	289	355	144	131	

FRAME	HA	HD	HM	K	A	AA	AB	AC	M	N	S	T	X1	LG	AD	X	ZZ
RA 80NS	8	399	224	ø11	125	30	155	222	ø165	ø130h6	ø11	4	115	166	/	/	M8
RA 80NM	8	399	224	ø11	125	30	155	222	ø165	ø130h6	ø11	4	115	166	/	/	M8
RA 80NP	8	358	224	ø11	125	30	155	222	ø165	ø130h6	ø11	4	115	166	/	/	M8
RA 90NM	8	424	242	ø11	140	30	169	169	ø165	ø130h6	ø11	4	115	200	/	/	M8
RA 90NP	8	383	242	ø11	140	30	169	169	ø165	ø130h6	ø11	4	115	200	/	/	M8
RA 100NM	15	423	277.5	ø12	160	58	238	238	ø165	ø130h6	ø11	3.5	146	220	/	/	M8
RA 100NP	15	423	277.5	ø12	160	58	238	238	ø165	ø130h6	ø11	3.5	146	220	/	/	M8

Dimensional drawings

IC06 (PVA) RA112-RA180

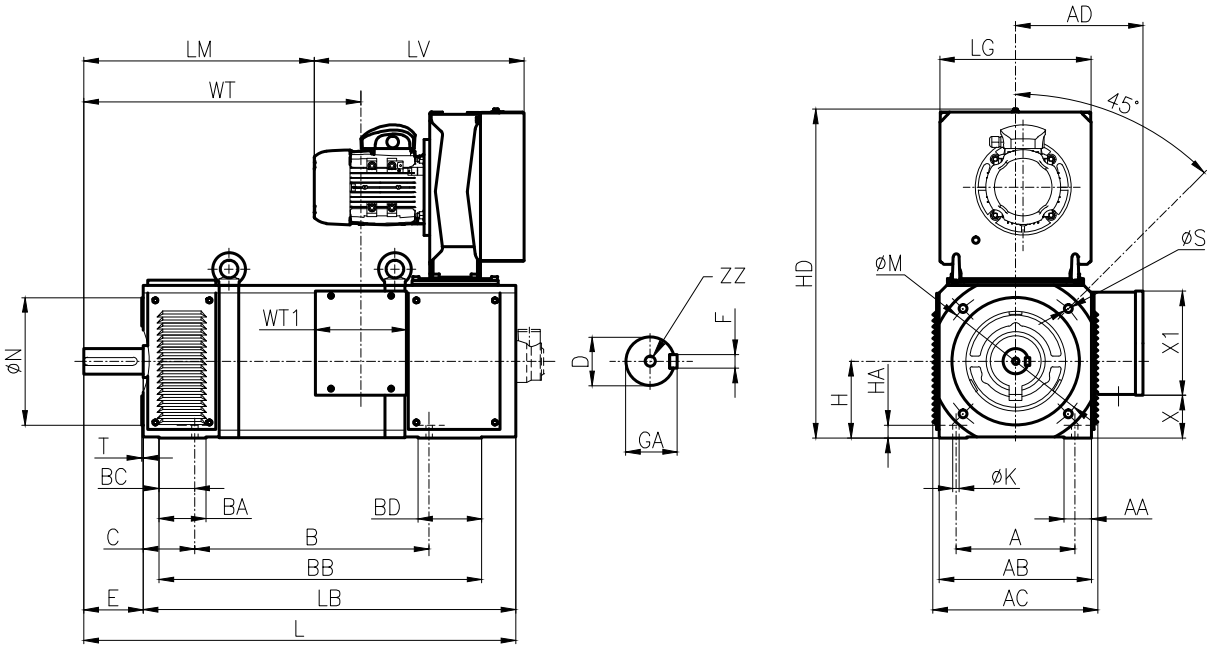

FRAME	D	E	C	GA	F	B	BA	BB	BC	BD	L	LB	LM	LV	WT	WT1	H
RA 112NS	Ø 38 k6 with key	80	70	41	10h9	260	93	353	68	70	485	405	197	357	424	131	112 0/-0.5
RA 112NM		80	70	41	10h9	290	93	383	68	70	515	435	227	357	454	131	
RA 112NL		80	70	41	10h9	350	93	443	68	70	575	495	287	357	514	131	
RA 132NS	Ø 48 k6 with key	110	89	51.5	14h9	330	50	391	30	50	657	547	321	367.5	555	159	132 0/-0.5
RA 132NM		110	89	51.5	14h9	375	50	436	30	50	702	592	366	367.5	600	159	
RA 132NL		110	89	51.5	14h9	420	50	481	30	50	747	637	411	367.5	645	159	
RA 132NP		110	89	51.5	14h9	460	50	521	30	50	787	677	451	367.5	685	159	
RA 160NS	Ø 55 m6 with key	110	108	59	16h9	338	90	504	68	120	727	617	317	438.5	438	159	160 0/-0.5
RA 160NM		110	108	59	16h9	383	90	549	68	120	772	662	362	438.5	483	159	
RA 160NL		110	108	59	16h9	438	90	604	68	120	827	717	417	438.5	538	159	
RA 160NP		110	108	59	16h9	493	90	659	68	120	882	772	472	438.5	593	159	
RA 180NS	Ø 60 m6 with key	140	121	64	18h9	436	110	644	84	150	901	761	418	540	537	215	180 0/-0.5
RA 180NM		140	121	64	18h9	491	110	699	84	150	956	816	473	540	592	215	
RA 180NL		140	121	64	18h9	546	110	754	84	150	1011	871	528	540	647	215	
RA 180NP		140	121	64	18h9	596	110	804	84	150	1061	921	578	540	697	215	

FRAME	HA	HD	HM	K	A	AA	AB	AC	M	N	S	T	X1	LG	AD	X	ZZ
RA 112NS	20	445	/	ø12	190	45	223	250	ø215	ø180h6	ø14	4	146	220	189	23	M12
RA 112NM	20	445	/	ø12	190	45	223	250	ø215	ø180h6	ø14	4	146	220	189	23	M12
RA 112NL	20	445	/	ø12	190	45	223	250	ø215	ø180h6	ø14	4	146	220	189	23	M12
RA 132NS	18	569	/	ø13	216	40	262	295	ø300	ø250h6	ø18	4	245	259	213	10	M16
RA 132NM	18	569	/	ø13	216	40	262	295	ø300	ø250h6	ø18	4	245	259	213	10	M16
RA 132NL	18	569	/	ø13	216	40	262	295	ø300	ø250h6	ø18	4	245	259	213	10	M16
RA 132NP	18	569	/	ø13	216	40	262	295	ø300	ø250h6	ø18	4	245	259	213	10	M16
RA 160NS	25	687	/	ø14	254	56	320	352	ø300	ø250h6	ø18	4	245	316	252	58	M16
RA 160NM	25	687	/	ø14	254	56	320	352	ø300	ø250h6	ø18	4	245	316	252	58	M16
RA 160NL	25	687	/	ø14	254	56	320	352	ø300	ø250h6	ø18	4	245	316	252	58	M16
RA 160NP	25	687	/	ø14	254	56	320	352	ø300	ø250h6	ø18	4	245	316	252	58	M16
RA 180NS	30	764	/	ø15	279	65	358	388	ø350	ø300h6	ø18	4	245	372	300	100	M20
RA 180NM	30	764	/	ø15	279	65	358	388	ø350	ø300h6	ø18	4	245	372	300	100	M20
RA 180NL	30	764	/	ø15	279	65	358	388	ø350	ø300h6	ø18	4	245	372	300	100	M20
RA 180NP	30	764	/	ø15	279	65	358	388	ø350	ø300h6	ø18	4	245	372	300	100	M20

Dimensional drawings

IC06 (PVA) RA200-RA315

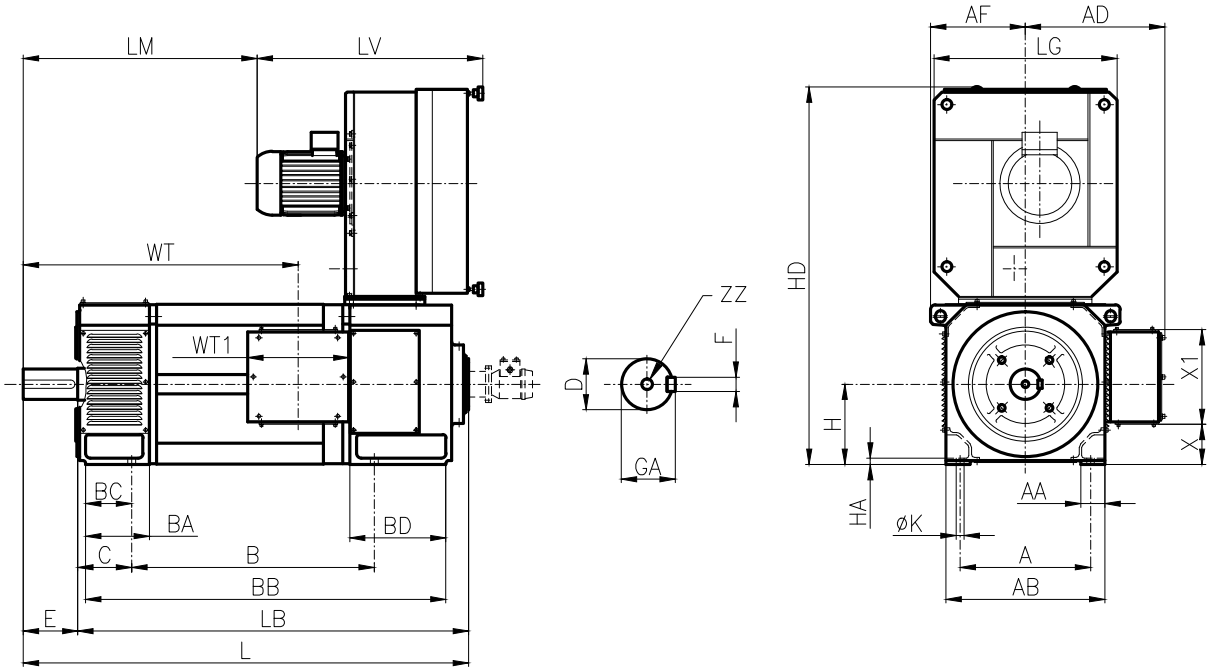

Dimensional drawings

IC86W (CBARH) RA200-RA315

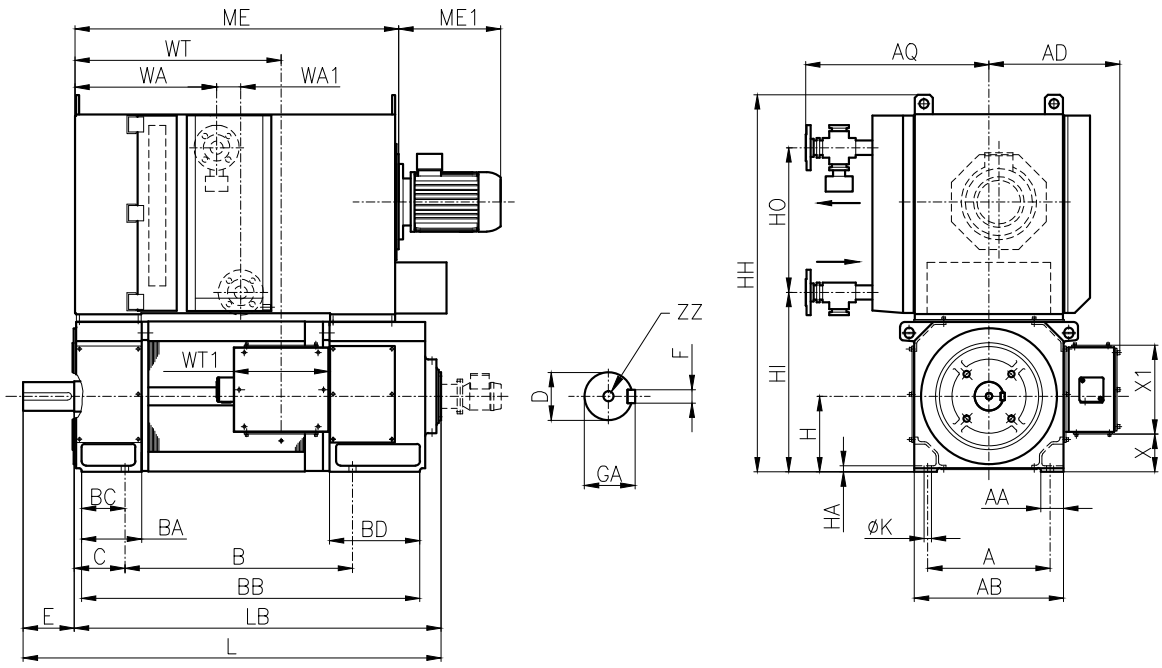

Dimensional drawings

SICME|ORANGE1

FRAME	D	E	C	GA	F	B	BA	BB	BC	BD	L	LB	LM	LV	WA	WA1	WT	WT1	AD	H
RA 200 K(N)S4	Ø 65 m6 with key	140	133	69	18h9	480	90	617	55	120	975	835	452	580	393	80	527	300	365	200 0 -0,5
RA 200 K(N)M4		140	133	69	18h9	545	90	682	55	120	1040	900	517	580	393	80	592	300	365	
RA 200 K(N)L4		140	133	69	18h9	630	90	767	55	120	1125	985	602	580	393	80	677	300	365	
RA 200 K(N)X4		140	133	69	18h9	680	90	817	55	120	1175	1035	652	580	393	80	727	300	365	
RA 200 K(N)Y4		140	133	69	18h9	730	90	867	55	120	1225	1085	702	580	393	80	777	300	365	
RA 225 K(N)S5	Ø 85 m6 with key	170	149	90	22h9	785	179	1033	125	270	1284	1114	605	630	455	80	777	315	410	225 0 -0,5
RA 225 K(N)M5		170	149	90	22h9	835	179	1083	125	270	1334	1164	655	630	455	80	827	315	410	
RA 225 K(N)L5		170	149	90	22h9	885	179	1133	125	270	1384	1214	705	630	455	80	877	315	410	
RA 225 K(N)P5		170	149	90	22h9	945	179	1193	125	270	1444	1274	765	630	455	80	937	315	410	
RA 225 K(N)X5		170	149	90	22h9	1015	179	1263	125	270	1514	1344	835	630	455	80	1007	315	410	
RA 250 K S5	Ø 95 m6 with key	170	168	100	25h9	755	200	1122	144	300	1379	1209	680	745	470	80	857	315	435	250 0 -0,5
RA 250 K M5		170	168	100	25h9	805	200	1172	144	300	1429	1259	730	745	470	80	907	315	435	
RA 250 K L5		170	168	100	25h9	865	200	1232	144	300	1489	1319	790	745	470	80	967	315	435	
RA 250 K P5		170	168	100	25h9	935	200	1302	144	300	1559	1389	860	745	470	80	1037	315	435	
RA 250 K X5		170	168	100	25h9	1015	200	1382	144	300	1639	1469	940	745	470	80	1117	315	435	
RA 280 KS6	Ø 95 m6 with key	170	190	100	25h9	845	205	1262	166	325	1519	1349	775	660	585	83	912	400	500	280 0 -0,5
RA 280 KM6		170	190	100	25h9	905	205	1322	166	325	1579	1409	835	660	585	83	972	400	500	
RA 280 KL6		170	190	100	25h9	975	205	1392	166	325	1649	1479	905	660	585	83	1042	400	500	
RA 280 KP6		170	190	100	25h9	1055	205	1472	166	325	1729	1559	985	660	585	83	1122	400	500	
RA 315 KR6	Ø 100 m6 with key	210	216	106	28h9	833	235	1207	192	325	1504	1294	685	755	585	83	897	400	535	315 0 -0,5
RA 315 KS6		210	216	106	28h9	933	235	1307	192	325	1604	1394	785	755	585	83	997	400	535	
RA 315 KM6		210	216	106	28h9	993	235	1367	192	325	1664	1454	845	755	585	83	1057	400	535	
RA 315 KL6		210	216	106	28h9	1063	235	1437	192	325	1734	1524	915	755	585	83	1127	400	535	
RA 315 KP6		210	216	106	28h9	1143	235	1517	192	325	1814	1604	995	755	585	83	1207	400	535	
RA 315 KR8	Ø 100 m6 with key	210	216	106	28h9	833	235	1307	192	425	1604	1394	735	755	586	83	897	400	535	315 0 -0,5
RA 315 KS8		210	216	106	28h9	933	235	1407	192	425	1704	1494	835	755	586	83	997	400	535	
RA 315 KM8		210	216	106	28h9	993	235	1467	192	425	1764	1554	895	755	586	83	1057	400	535	
RA 315 KL8		210	216	106	28h9	1063	235	1537	192	425	1834	1624	965	755	586	83	1127	400	535	
RA 315 KP8		210	216	106	28h9	1143	235	1617	192	425	1914	1704	1045	755	586	83	1207	400	535	

FRAME	HA	HD	HH	HI	HO	K	A	AA	AB	AF	AQ	X	X1	LG	ME	ME1	ZZ
RA 200 K(N)S4	22	900	1030	535	390	ø19	318	62	390	228	545	83	265	450	730	295	M20
RA 200 K(N)M4	22	900	1030	535	390	ø19	318	62	390	228	545	83	265	450	795	295	M20
RA 200 K(N)L4	22	900	1030	535	390	ø19	318	62	390	228	545	83	265	450	880	295	M20
RA 200 K(N)X4	22	900	1030	535	390	ø19	318	62	390	228	545	83	265	450	930	295	M20
RA 200 K(N)Y4	22	900	1030	535	390	ø19	318	62	390	228	545	83	265	450	980	295	M20
RA 225 K(N)S5	25	1130	1140	590	435	ø19	356	70	445	270	600	105	295	500	963	350	M20
RA 225 K(N)M5	25	1130	1140	590	435	ø19	356	70	445	270	600	105	295	500	1013	350	M20
RA 225 K(N)L5	25	1130	1140	590	435	ø19	356	70	445	270	600	105	295	500	1063	350	M20
RA 225 K(N)P5	25	1130	1140	590	435	ø19	356	70	445	270	600	105	295	500	1123	350	M20
RA 225 K(N)X5	25	1130	1140	590	435	ø19	406	70	445	270	600	105	295	500	1193	350	M20
RA 250 K S5	25	1290	1255	595	480	ø24	406	75	495	295	645	125	295	570	1065	350	M24
RA 250 K M5	25	1290	1255	595	480	ø24	406	75	495	295	645	125	295	570	1115	350	M24
RA 250 K L5	25	1290	1255	595	480	ø24	406	75	495	295	645	125	295	570	1175	350	M24
RA 250 K P5	25	1290	1255	595	480	ø24	406	75	495	295	645	125	295	570	1245	350	M24
RA 250 K X5	25	1290	1255	595	480	ø24	406	75	495	295	645	125	295	570	1325	350	M24
RA 280 KS6	22	1500	1360	740	515	ø24	457	80	555	330	710	127	365	700	1185	350	M24
RA 280 KM6	22	1500	1360	740	515	ø24	457	80	555	330	710	127	365	700	1245	350	M24
RA 280 KL6	22	1500	1360	740	515	ø24	457	80	555	330	710	127	365	700	1315	350	M24
RA 280 KP6	22	1500	1360	740	515	ø24	457	80	555	330	710	127	365	700	1395	350	M24
RA 315 KR6	26	1605	1525	810	610	ø28	508	93	625	360	740	162	365	770	1160	410	M24
RA 315 KS6	26	1605	1525	810	610	ø28	508	93	625	360	740	162	365	770	1260	410	M24
RA 315 KM6	26	1605	1525	810	610	ø28	508	93	625	360	740	162	365	770	1320	410	M24
RA 315 KL6	26	1605	1525	810	610	ø28	508	93	625	360	740	162	365	770	1390	410	M24
RA 315 KP6	26	1605	1525	810	610	ø28	508	93	625	360	740	162	365	770	1470	410	M24
RA 315 KR8	26	1605	1525	810	610	ø28	508	93	625	360	740	162	365	770	1260	410	M24
RA 315 KS8	26	1605	1525	810	610	ø28	508	93	625	360	740	162	365	770	1360	410	M24
RA 315 KM8	26	1605	1525	810	610	ø28	508	93	625	360	740	162	365	770	1420	410	M24
RA 315 KL8	26	1605	1525	810	610	ø28	508	93	625	360	740	162	365	770	1490	410	M24
RA 315 KP8	26	1605	1525	810	610	ø28	508	93	625	360	740	162	365	770	1570	410	M24

Dimensional drawings

IC06 (PVA) RA355-RA400

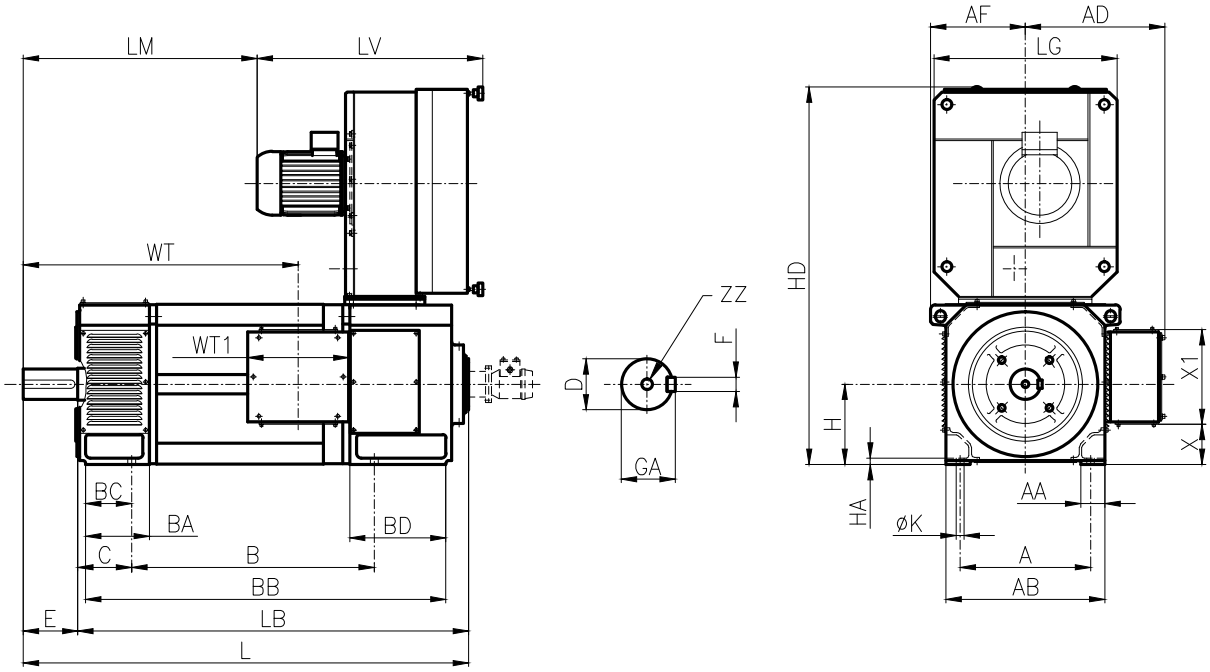

Dimensional drawings

IC86W (CBARH) RA355-RA400

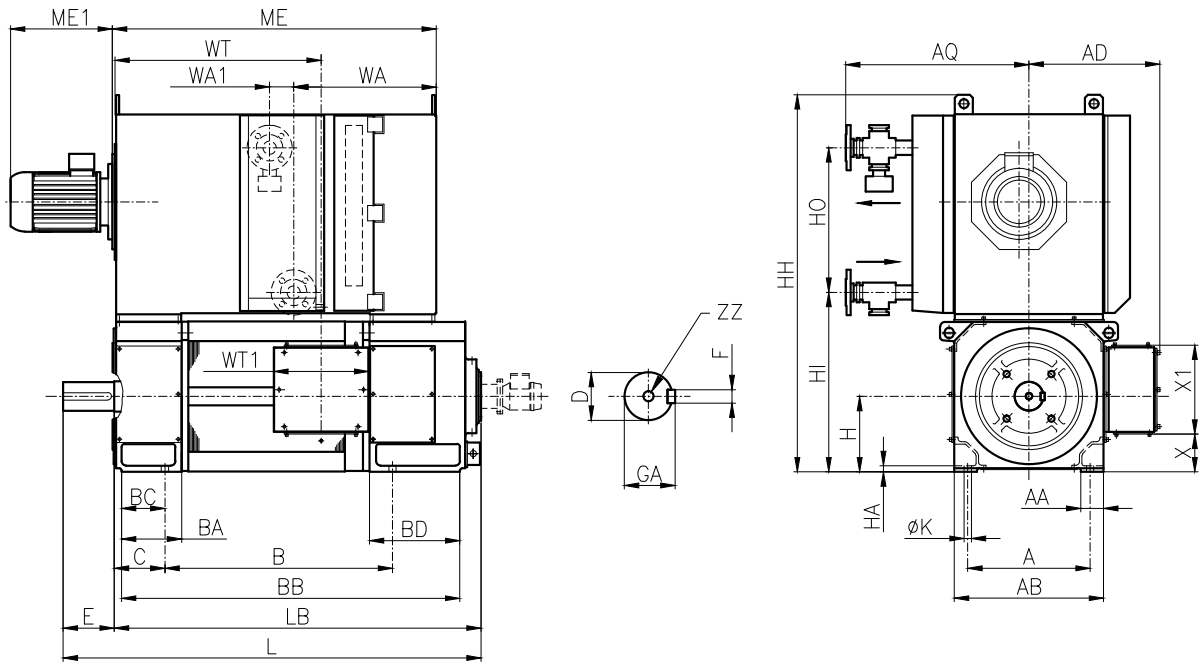

FRAME	D	E	C	GA	F	B	BA	BB	BC	BD	L	LB	LM	LV	WA	WA1	WT	WT1	AD	H
RA 355 KR6	Ø 110 m6 with key	210	254	116	28h9	932	270	1420	224	450	1756	1546	825	775	630	83	984	400	575	355 0 -1
RA 355 KS6		210	254	116	28h9	1032	270	1520	224	450	1856	1646	925	775	630	83	1084	400	575	
RA 355 KM6		210	254	116	28h9	1092	270	1580	224	450	1916	1706	985	775	630	83	1144	400	575	
RA 355 KL6		210	254	116	28h9	1162	270	1650	224	450	1986	1776	1055	775	630	83	1214	400	575	
RA 355 KX6		210	254	116	28h9	1242	270	1730	224	450	2066	1856	1135	775	630	83	1294	400	575	
RA 355 KR7	Ø 110 m6 with key	210	254	116	28h9	932	270	1470	224	500	1806	1596	850	775	630	83	984	400	575	355 0 -1
RA 355 KS7		210	254	116	28h9	1032	270	1570	224	500	1906	1696	950	775	630	83	1084	400	575	
RA 355 KM7		210	254	116	28h9	1092	270	1630	224	500	1966	1756	1010	775	630	83	1144	400	575	
RA 355 KL7		210	254	116	28h9	1162	270	1700	224	500	2036	1826	1080	775	630	83	1214	400	575	
RA 355 KX7		210	254	116	28h9	1242	270	1780	224	500	2116	1906	1160	775	630	83	1294	400	575	
RA 400 KR6	Ø 130 m6 with key	250	280	137	32h9	935	305	1470	250	455	1856	1606	928	775	730	124	1024	500	675	400 0 -1
RA 400 KS6		250	280	137	32h9	1035	305	1570	250	455	1956	1706	1028	775	730	124	1124	500	675	
RA 400 KM6		250	280	137	32h9	1095	305	1630	250	455	2016	1766	1088	775	730	124	1184	500	675	
RA 400 KL6		250	280	137	32h9	1165	305	1700	250	455	2086	1836	1158	775	730	124	1254	500	675	
RA 400 KX6		250	280	137	32h9	1245	305	1780	250	455	2166	1916	1238	775	730	124	1334	500	675	
RA 400 KR7	Ø 130 m6 with key	250	280	137	32h9	935	305	1520	250	505	1906	1656	953	775	730	124	1024	500	675	400 0 -1
RA 400 KS7		250	280	137	32h9	1035	305	1620	250	505	2006	1756	1053	775	730	124	1124	500	675	
RA 400 KM7		250	280	137	32h9	1095	305	1680	250	505	2066	1816	1113	775	730	124	1184	500	675	
RA 400 KL7		250	280	137	32h9	1165	305	1750	250	505	2136	1886	1183	775	730	124	1254	500	675	
RA 400 KX7		250	280	137	32h9	1245	305	1830	250	505	2216	1966	1263	775	730	124	1334	500	675	

FRAME	HA	HD	HH	HI	HO	K	A	AA	AB	AF	AQ	X	X1	LG	ME	ME1	ZZ
RA 355 KR6	30	1640	1660	895	657	ø28	610	100	710	410	785	197	365	820	1295	420	M24
RA 355 KS6	30	1640	1660	895	657	ø28	610	100	710	410	785	197	365	820	1395	420	M24
RA 355 KM6	30	1640	1660	895	657	ø28	610	100	710	410	785	197	365	820	1455	420	M24
RA 355 KL6	30	1640	1660	895	657	ø28	610	100	710	410	785	197	365	820	1525	420	M24
RA 355 KX6	30	1640	1660	895	657	ø28	610	100	710	410	785	197	365	820	1605	420	M24
RA 355 KR7	30	1665	1660	895	657	ø28	610	100	710	410	785	197	365	820	1345	420	M24
RA 355 KS7	30	1665	1660	895	657	ø28	610	100	710	410	785	197	365	820	1445	420	M24
RA 355 KM7	30	1665	1660	895	657	ø28	610	100	710	410	785	197	365	820	1505	420	M24
RA 355 KL7	30	1665	1660	895	657	ø28	610	100	710	410	785	197	365	820	1575	420	M24
RA 355 KX7	30	1665	1660	895	657	ø28	610	100	710	410	785	197	365	820	1655	420	M24
RA 400 KR6	30	1670	1775	985	657	ø35	686	110	800	455	820	205	465	820	1365	430	M24
RA 400 KS6	30	1670	1775	985	657	ø35	686	110	800	455	820	205	465	820	1465	430	M24
RA 400 KM6	30	1670	1775	985	657	ø35	686	110	800	455	820	205	465	820	1525	430	M24
RA 400 KL6	30	1670	1775	985	657	ø35	686	110	800	455	820	205	465	820	1595	430	M24
RA 400 KX6	30	1670	1775	985	657	ø35	686	110	800	455	820	205	465	820	1675	430	M24
RA 400 KR7	30	1695	1775	985	657	ø35	686	110	800	455	820	205	465	820	1390	430	M24
RA 400 KS7	30	1695	1775	985	657	ø35	686	110	800	455	820	205	465	820	1490	430	M24
RA 400 KM7	30	1695	1775	985	657	ø35	686	110	800	455	820	205	465	820	1550	430	M24
RA 400 KL7	30	1695	1775	985	657	ø35	686	110	800	455	820	205	465	820	1620	430	M24
RA 400 KX7	30	1695	1775	985	657	ø35	686	110	800	455	820	205	465	820	1700	430	M24

Dimensional drawings
IC06 (PVA) RA450

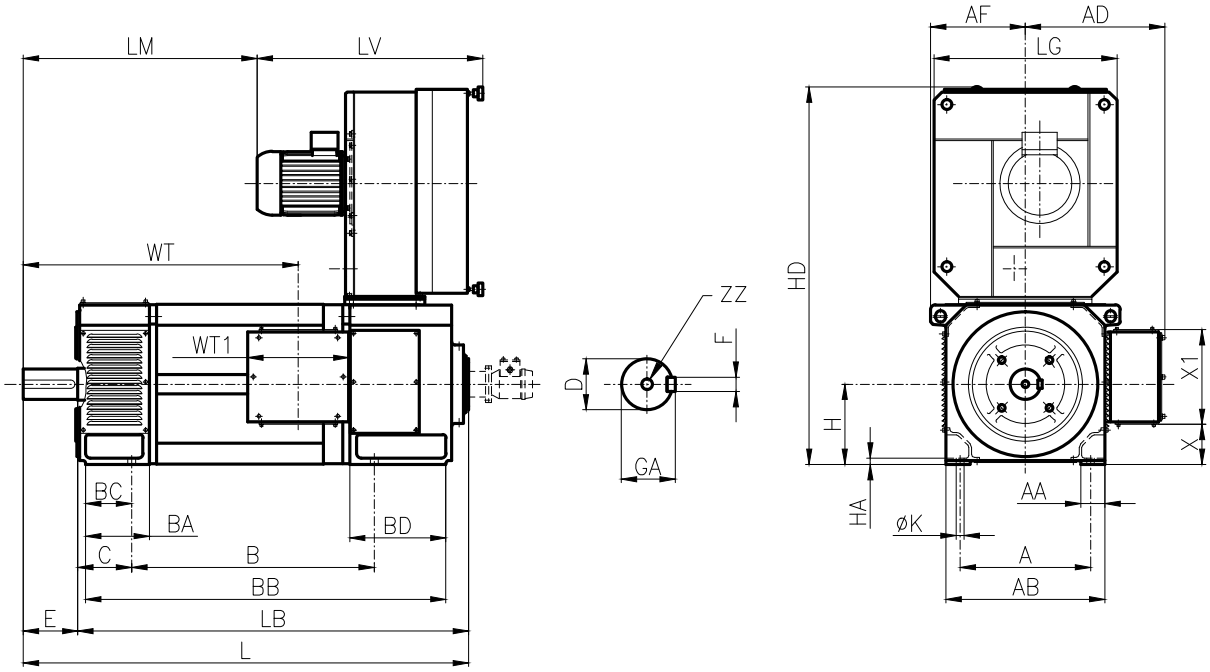

Dimensional drawings
IC86W (CBARH) RA450

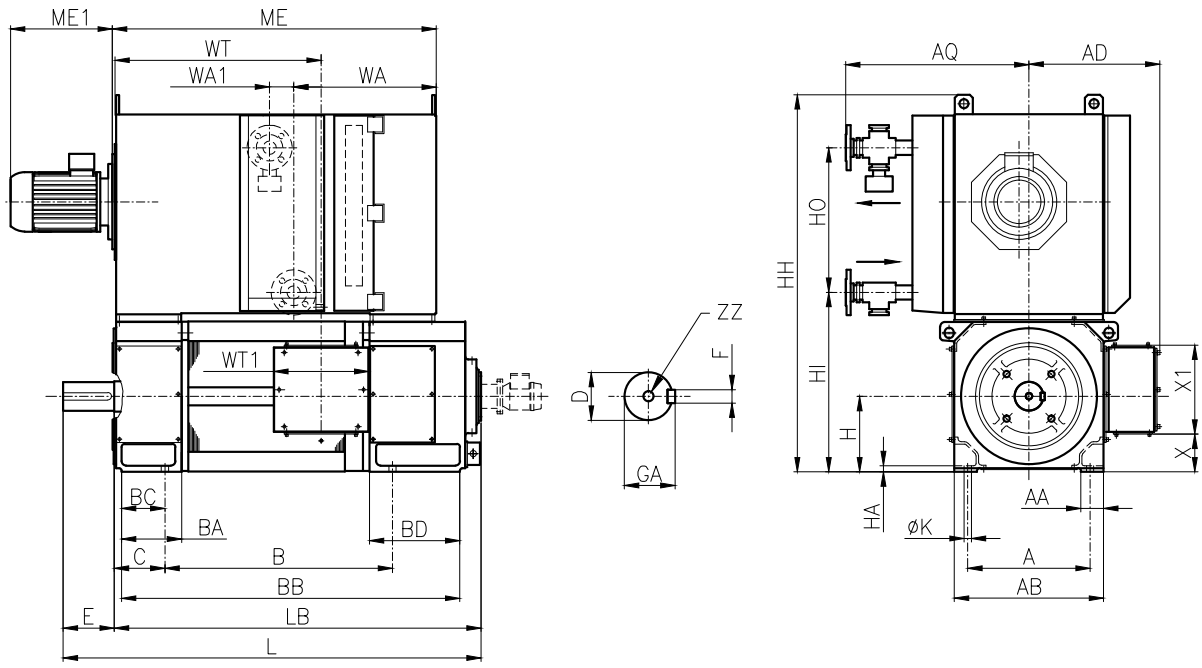

FRAME	D	E	C	GA	F	B	BA	BB	BC	BD	L	LB	LM	LV	WA	WA1	WT	WT1	AD	H
RA 450 KRS6	Ø 140 m6 with key	250	315	148	36h9	845	335	1465	285	455	1825	1575	938	920	690	124	1012	500	720	450 0 -1
RA 450 KRM6		250	315	148	36h9	885	335	1505	285	455	1865	1615	978	920	690	124	1052	500	720	
RA 450 KR6		250	315	148	36h9	930	335	1550	285	455	1910	1660	1023	920	690	124	1097	500	720	
RA 450 KS6		250	315	148	36h9	980	335	1600	285	455	1960	1710	1073	920	690	124	1147	500	720	
RA 450 KSM6	Ø 150 m6 with key	250	315	158	36h9	1030	335	1650	285	455	2010	1760	1123	920	690	124	1197	500	720	450 0 -1
RA 450 KM6		250	315	158	36h9	1090	335	1710	285	455	2070	1820	1183	920	690	124	1257	500	720	
RA 450 KML6		250	315	158	36h9	1160	335	1780	285	455	2140	1890	1253	920	690	124	1327	500	720	
RA 450 KL6		250	315	158	36h9	1240	335	1860	285	455	2220	1970	1333	920	690	124	1407	500	720	
RA 450 KX6		250	315	158	36h9	1330	335	1950	285	455	2310	2060	1423	920	690	124	1497	500	720	
RA 450 KRS8	Ø 140 m6 with key	250	315	148	36h9	845	335	1585	285	575	1945	1695	998	920	690	124	1012	500	720	450 0 -1
RA 450 KRM8		250	315	148	36h9	885	335	1625	285	575	1985	1735	1038	920	690	124	1052	500	720	
RA 450 KR8		250	315	148	36h9	930	335	1670	285	575	2030	1780	1083	920	690	124	1097	500	720	
RA 450 KS8		250	315	148	36h9	980	335	1720	285	575	2080	1830	1133	920	690	124	1147	500	720	
RA 450 KSM8	Ø 150 m6 with key	250	315	158	36h9	1030	335	1770	285	575	2130	1880	1183	920	690	124	1197	500	720	450 0 -1
RA 450 KM8		250	315	158	36h9	1090	335	1830	285	575	2190	1940	1243	920	690	124	1257	500	720	
RA 450 KML8		250	315	158	36h9	1160	335	1900	285	575	2260	2010	1313	920	690	124	1327	500	720	
RA 450 KL8		250	315	158	36h9	1240	335	1980	285	575	2340	2090	1393	920	690	124	1407	500	720	
RA 450 KX8		250	315	158	36h9	1330	335	2070	285	575	2430	2180	1483	920	690	124	1497	500	720	

FRAME	HA	HD	HH	HI	HO	K	A	AA	AB	AF	AQ	X	X1	LG	ME	ME1	ZZ
RA 450 KRS6	35	1850	1985	1072	800	ø35	800	120	890	510	875	255	465	900	1390	550	M24
RA 450 KRM6	35	1850	1985	1072	800	ø35	800	120	890	510	875	255	465	900	1430	550	M24
RA 450 KR6	35	1850	1985	1072	800	ø35	800	120	890	510	875	255	465	900	1475	550	M24
RA 450 KS6	35	1850	1985	1072	800	ø35	800	120	890	510	875	255	465	900	1525	550	M24
RA 450 KSM6	35	1850	1985	1072	800	ø35	800	120	890	510	875	255	465	900	1575	550	M24
RA 450 KM6	35	1850	1985	1072	800	ø35	800	120	890	510	875	255	465	900	1635	550	M30
RA 450 KML6	35	1850	1985	1072	800	ø35	800	120	890	510	875	255	465	900	1705	550	M30
RA 450 KL6	35	1850	1985	1072	800	ø35	800	120	890	510	875	255	465	900	1785	550	M30
RA 450 KX6	35	1850	1985	1072	800	ø35	800	120	890	510	875	255	465	900	1875	550	M30
RA 450 KRS8	35	1875	1985	1072	800	ø35	800	120	890	510	875	255	465	900	1510	550	M24
RA 450 KRM8	35	1875	1985	1072	800	ø35	800	120	890	510	875	255	465	900	1550	550	M24
RA 450 KR8	35	1875	1985	1072	800	ø35	800	120	890	510	875	255	465	900	1595	550	M24
RA 450 KS8	35	1875	1985	1072	800	ø35	800	120	890	510	875	255	465	900	1645	550	M24
RA 450 KSM8	35	1875	1985	1072	800	ø35	800	120	890	510	875	255	465	900	1695	550	M30
RA 450 KM8	35	1875	1985	1072	800	ø35	800	120	890	510	875	255	465	900	1755	550	M30
RA 450 KML8	35	1875	1985	1072	800	ø35	800	120	890	510	875	255	465	900	1825	550	M30
RA 450 KL8	35	1875	1985	1072	800	ø35	800	120	890	510	875	255	465	900	1905	550	M30
RA 450 KX8	35	1875	1985	1072	800	ø35	800	120	890	510	875	255	465	900	1995	550	M30

Dimensional drawings

IC06 (PVA)
IC86W (CBARH)
RA500-630

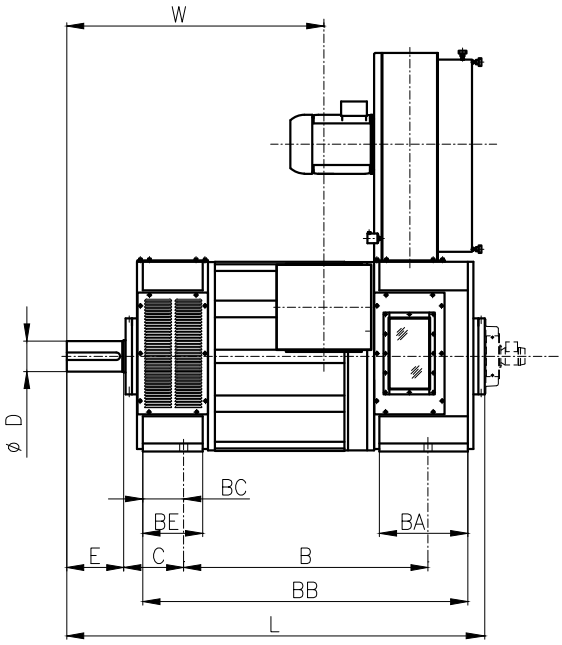

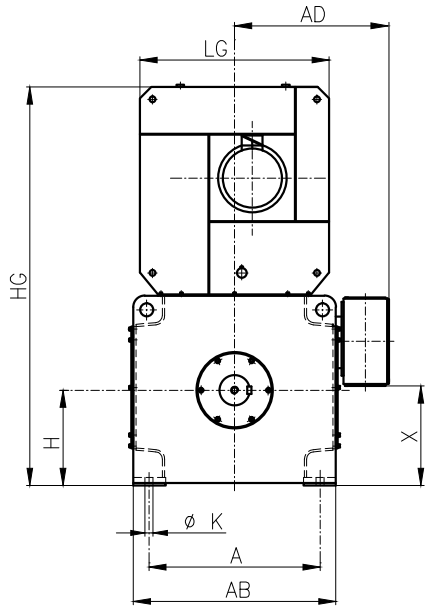

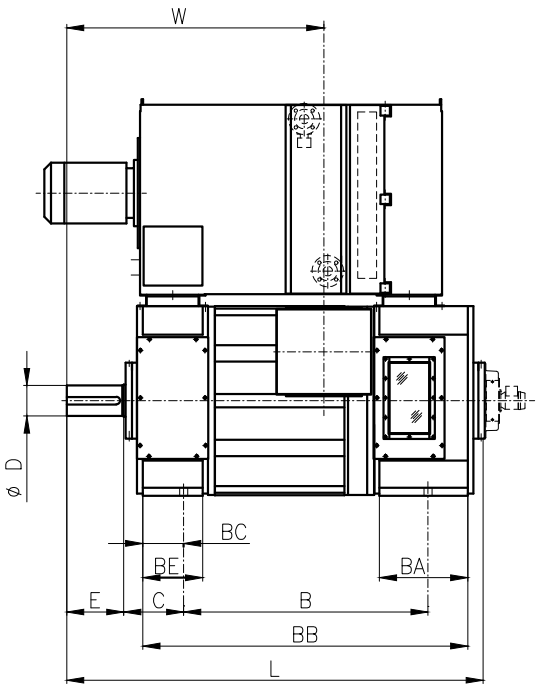

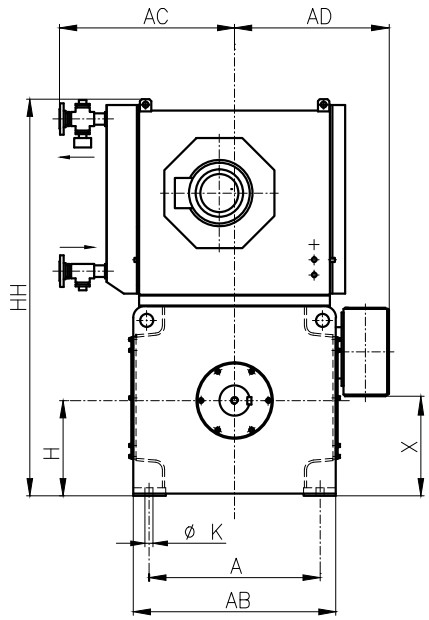

FRAME	D	E	C	B	BA	BB	BC	BE	L	W	AD	H	HG	HH	K	A	AB	X	LG	AC
RA 500 KRS6	160 m6 with key	300	315	970	465	1394	215	315	1875	1038	825	500 0 -1	2110	2084	42	900	1065	524	995	1020
RA 500 KRM6		300	315	1010	465	1434	215	315	1915	1078	825		2110	2084	42	900	1065	524	995	1020
RA 500 KR6		300	315	1055	465	1479	215	315	1960	1123	825		2110	2084	42	900	1065	524	995	1020
RA 500 KS6		300	315	1105	465	1529	215	315	2010	1173	825		2110	2084	42	900	1065	524	995	1020
RA 500 KSM6	170 m6 with key	300	315	1155	465	1579	215	315	2060	1223	825		2110	2084	42	900	1065	524	995	1020
RA 500 KM6		300	315	1215	465	1639	215	315	2120	1283	825		2110	2084	42	900	1065	524	995	1020
RA 500 KML6		300	315	1285	465	1709	215	315	2190	1353	825		2110	2084	42	900	1065	524	995	1020
RA 500 KL6		300	315	1365	465	1789	215	315	2270	1433	825		2110	2084	42	900	1065	524	995	1020
RA 500 KX6		300	315	1455	465	1879	215	315	2360	1523	825		2110	2084	42	900	1065	524	995	1020
RA 500 KRS7	160 m6 with key	300	315	970	510	1439	215	315	1920	1038	825	500 0 -1	2131	2084	42	900	1065	524	995	1020
RA 500 KRM7		300	315	1010	510	1479	215	315	1960	1078	825		2131	2084	42	900	1065	524	995	1020
RA 500 KR7		300	315	1055	510	1524	215	315	2005	1123	825		2131	2084	42	900	1065	524	995	1020
RA 500 KS7		300	315	1105	510	1574	215	315	2055	1173	825		2131	2084	42	900	1065	524	995	1020
RA 500 KSM7	170 m6 with key	300	315	1155	510	1624	215	315	2105	1223	825		2131	2084	42	900	1065	524	995	1020
RA 500 KM7		300	315	1215	510	1684	215	315	2165	1283	825		2131	2084	42	900	1065	524	995	1020
RA 500 KML7		300	315	1285	510	1754	215	315	2235	1353	825		2131	2084	42	900	1065	524	995	1020
RA 500 KL7		300	315	1365	510	1834	215	315	2315	1433	825		2131	2084	42	900	1065	524	995	1020
RA 500 KX7		300	315	1455	510	1924	215	315	2405	1523	825		2131	2084	42	900	1065	524	995	1020
RA 560 KRS6	170 m6 with key	300	315	1020	495	1444	210	315	1935	1063	875	560 0 -1	2350	2433	42	1000	1185	616	1100	1070
RA 560 KRM6		300	315	1060	495	1484	210	315	1975	1103	875		2350	2433	42	1000	1185	616	1100	1070
RA 560 KR6		300	315	1105	495	1529	210	315	2020	1148	875		2350	2433	42	1000	1185	616	1100	1070
RA 560 KS6		300	315	1155	495	1579	210	315	2070	1198	875		2350	2433	42	1000	1185	616	1100	1070
RA 560 KSM6	180 m6 with key	300	315	1205	495	1629	210	315	2120	1248	875		2350	2433	42	1000	1185	616	1100	1070
RA 560 KM6		300	315	1265	495	1689	210	315	2180	1308	875		2350	2433	42	1000	1185	616	1100	1070
RA 560 KML6		300	315	1335	495	1759	210	315	2250	1378	875		2350	2433	42	1000	1185	616	1100	1070
RA 560 KL6		300	315	1415	495	1839	210	315	2330	1458	875		2350	2433	42	1000	1185	616	1100	1070
RA 560 K6		300	315	1505	495	1929	210	315	2420	1548	875		2350	2433	42	1000	1185	616	1100	1070
RA 560 KRS8	170 m6 with key	300	315	1020	625	1574	210	315	2065	1063	875	560 0 -1	2371	2433	42	1000	1185	616	1100	1070
RA 560 KRM8		300	315	1060	625	1614	210	315	2105	1103	875		2371	2433	42	1000	1185	616	1100	1070
RA 560 KR8		300	315	1105	625	1659	210	315	2150	1148	875		2371	2433	42	1000	1185	616	1100	1070
RA 560 KS8		300	315	1155	625	1709	210	315	2200	1198	875		2371	2433	42	1000	1185	616	1100	1070
RA 560 KSM8	180 m6 with key	300	315	1205	625	1759	210	315	2250	1248	875		2371	2433	42	1000	1185	616	1100	1070
RA 560 KM8		300	315	1265	625	1819	210	315	2310	1308	875		2371	2433	42	1000	1185	616	1100	1070
RA 560 KML8		300	315	1335	625	1889	210	315	2380	1378	875		2371	2433	42	1000	1185	616	1100	1070
RA 560 KL8		300	315	1415	625	1969	210	315	2460	1458	875		2371	2433	42	1000	1185	616	1100	1070
RA 560 KX8		300	315	1505	625	2059	210	315	2550	1548	875		2371	2433	42	1000	1185	616	1100	1070
RA 630 KRS6	180 +0.250 +0.225 keyless	240	315	1070	505	1461	194	320	1915	1015	945	630 0 -1	2655	2571	42	1180	1340	720	1260	1070
RA 630 KRM6		240	315	1110	505	1501	194	320	1955	1055	945		2655	2571	42	1180	1340	720	1260	1070
RA 630 KR6		240	315	1155	505	1546	194	320	2000	1100	945		2655	2571	42	1180	1340	720	1260	1070
RA 630 KS6		240	315	1205	505	1596	194	320	2050	1150	945		2655	2571	42	1180	1340	720	1260	1070
RA 630 KSM6	200 +0.305 +0.275 keyless	280	315	1255	505	1646	194	320	2140	1240	945		2655	2571	42	1180	1340	720	1260	1070
RA 630 KM6		280	315	1315	505	1706	194	320	2200	1300	945		2655	2571	42	1180	1340	720	1260	1070
RA 630 KML6		280	315	1385	505	1776	194	320	2270	1370	945		2655	2571	42	1180	1340	720	1260	1070
RA 630 KL6		280	315	1465	505	1856	194	320	2350	1450	945		2655	2571	42	1180	1340	720	1260	1070
RA 630 KX6		280	315	1555	505	1946	194	320	2440	1540	945		2655	2571	42	1180	1340	720	1260	1070
RA 630 KRS8	180 +0.250 +0.225 keyless	240	315	1070	630	1586	194	320	2040	1015	945	630 0 -1	2655	2571	42	1180	1340	720	1260	1070
RA 630 KRM8		240	315	1110	630	1626	194	320	2080	1055	945		2655	2571	42	1180	1340	720	1260	1070
RA 630 KR8		240	315	1155	630	1671	194	320	2125	1100	945		2655	2571	42	1180	1340	720	1260	1070
RA 630 KS8		240	315	1205	630	1721	194	320	2175	1150	945		2655	2571	42	1180	1340	720	1260	1070
RA 630 KSM8	200 +0.305 +0.275 keyless	280	315	1255	630	1771	194	320	2265	1240	945		2655	2571	42	1180	1340	720	1260	1070
RA 630 KM8		280	315	1315	630	1831	194	320	2325	1300	945		2655	2571	42	1180	1340	720	1260	1070
RA 630 KML8		280	315	1385	630	1901	194	320	2395	1370	945		2655	2571	42	1180	1340	720	1260	1070
RA 630 KL8		280	315	1465	630	1981	194	320	2475	1450	945		2655	2571	42	1180	1340	720	1260	1070
RA 630 KX8		280	315	1555	630	2071	194	320	2565	1540	945		2655	2571	42	1180	1340	720	1260	1070

Dimensional drawings

IC06 (PVA)
IC86W (CBARH)
RA710-800

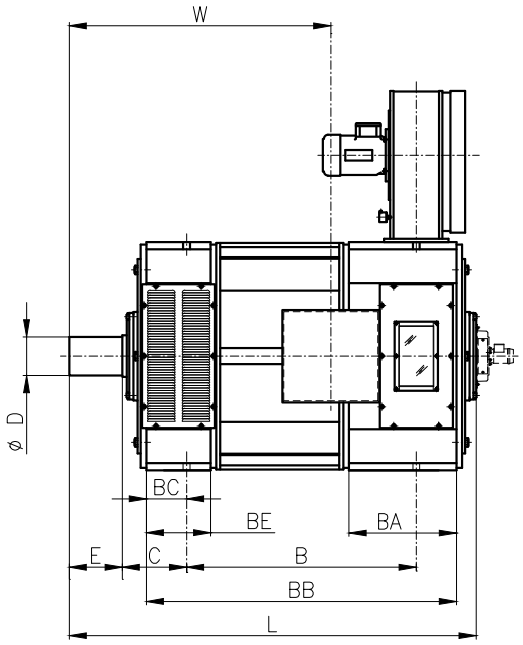

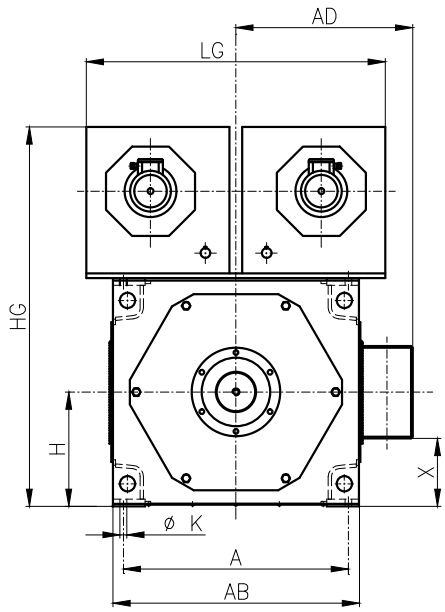

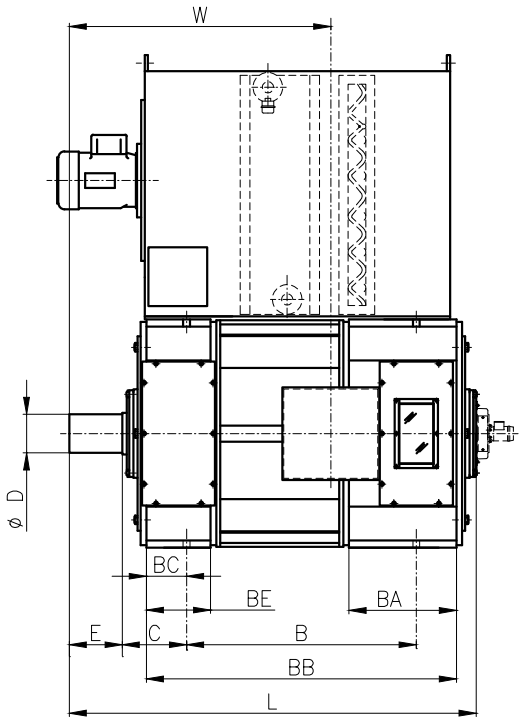

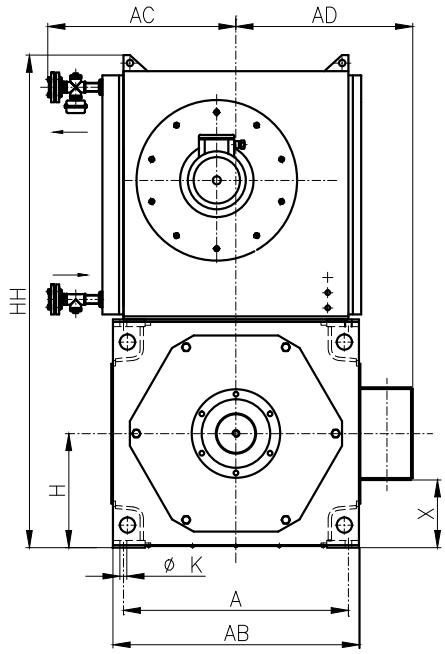

FRAME	D	E	C	B	BA	BB	BC	BE	L	W	AD	H	HG	HH	K	A	AB	X	LG	AC
RA 710 KRS6	200 +0.305 +0.275 keyless	280	400	1035	670	1535	250	400	2087	1183	1100	710 o -1.5	2360	3065	42	1400	1530	422	1860	1125
RA 710 KRM6		280	400	1075	670	1575	250	400	2127	1223	1100		2360	3065	42	1400	1530	422	1860	1125
RA 710 KR6		280	400	1120	670	1620	250	400	2172	1268	1100		2360	3065	42	1400	1530	422	1860	1125
RA 710 KS6	220 +0.305 +0.275 keyless	280	400	1170	670	1670	250	400	2222	1318	1100		2360	3065	42	1400	1530	422	1860	1125
RA 710 KSM6		280	400	1220	670	1720	250	400	2272	1368	1100		2360	3065	42	1400	1530	422	1860	1125
RA 710 KM6		280	400	1280	670	1780	250	400	2332	1428	1100		2360	3065	42	1400	1530	422	1860	1125
RA 710 KML6	240 +0.305 +0.275 keyless	330	400	1350	670	1850	250	400	2452	1548	1100		2360	3065	42	1400	1530	422	1860	1125
RA 710 KL6		330	400	1430	670	1930	250	400	2532	1628	1100		2360	3065	42	1400	1530	422	1860	1125
RA 710 KX6		330	400	1520	670	2020	250	400	2622	1718	1100		2360	3065	42	1400	1530	422	1860	1125
RA 710 KRS8	200 +0.305 +0.275 keyless	280	400	1155	790	1655	250	400	2207	1183	1100	710 o -1.5	2360	3065	42	1400	1530	422	1860	1125
RA 710 RM8		280	400	1195	790	1695	250	400	2247	1223	1100		2360	3065	42	1400	1530	422	1860	1125
RA 710 KR8		280	400	1240	790	1740	250	400	2292	1268	1100		2360	3065	42	1400	1530	422	1860	1125
RA 710 KS8	220 +0.305 +0.275 keyless	280	400	1290	790	1790	250	400	2342	1318	1100		2360	3065	42	1400	1530	422	1860	1125
RA 710 KSM8		280	400	1340	790	1840	250	400	2392	1368	1100		2360	3065	42	1400	1530	422	1860	1125
RA 710 KM8		280	400	1400	790	1900	250	400	2452	1428	1100		2360	3065	42	1400	1530	422	1860	1125
RA 710 KML8	240 +0.305 +0.275 keyless	330	400	1470	790	1970	250	400	2572	1548	1100		2360	3065	42	1400	1530	422	1860	1125
RA 710 KL8		330	400	1550	790	2050	250	400	2652	1628	1100		2360	3065	42	1400	1530	422	1860	1125
RA 710 KX8		330	400	1640	790	2140	250	400	2742	1718	1100		2360	3065	42	1400	1530	422	1860	1125
RA 800 KRS6	220 +0.305 +0.275 keyless	280	400	1035	670	1535	250	400	2087	1183	1130	800 o -1.5	2900	3300	42	1400	1590	510	2250	1125
RA 800 KRM6		280	400	1075	670	1575	250	400	2127	1223	1130		2900	3300	42	1400	1590	510	2250	1125
RA 800 KR6		280	400	1120	670	1620	250	400	2172	1268	1130		2900	3300	42	1400	1590	510	2250	1125
RA 800 KS6	240 +0.305 +0.275 keyless	330	425	1170	670	1670	250	400	2308	1393	1130		2900	3300	42	1400	1590	510	2250	1125
RA 800 KSM6		330	425	1220	670	1720	250	400	2358	1443	1130		2900	3300	42	1400	1590	510	2250	1125
RA 800 KM6		330	425	1280	670	1780	250	400	2418	1503	1130		2900	3300	42	1400	1590	510	2250	1125
RA 800 KML6	260 +0.347 +0.315 keyless	330	425	1350	670	1850	250	400	2503	1573	1130		2900	3300	42	1400	1590	510	2250	1125
RA 800 KL6		330	425	1430	670	1930	250	400	2583	1653	1130		2900	3300	42	1400	1590	510	2250	1125
RA 800 KX6		330	425	1520	670	2020	250	400	2673	1743	1130		2900	3300	42	1400	1590	510	2250	1125
RA 800 KRS8	220 +0.305 +0.275 keyless	280	400	1155	790	1655	250	400	2207	1183	1130	800 o -1.5	2900	3300	42	1400	1590	510	2250	1125
RA 800 KRM8		280	400	1195	790	1695	250	400	2247	1223	1130		2900	3300	42	1400	1590	510	2250	1125
RA 800 KR8		280	400	1240	790	1740	250	400	2292	1268	1130		2900	3300	42	1400	1590	510	2250	1125
RA 800 KS8	240 +0.305 +0.275 keyless	330	425	1290	790	1790	250	400	2428	1393	1130		2900	3300	42	1400	1590	510	2250	1125
RA 800 KSM8		330	425	1340	790	1840	250	400	2478	1443	1130		2900	3300	42	1400	1590	510	2250	1125
RA 800 KM8		330	425	1400	790	1900	250	400	2538	1503	1130		2900	3300	42	1400	1590	510	2250	1125
RA 800 KML8	260 +0.347 +0.315 keyless	330	425	1470	790	1970	250	400	2623	1573	1130		2900	3300	42	1400	1590	510	2250	1125
RA 800 KL8		330	425	1550	790	2050	250	400	2703	1653	1130		2900	3300	42	1400	1590	510	2250	1125
RA 800 KX8		330	425	1640	790	2140	250	400	2793	1743	1130		2900	3300	42	1400	1590	510	2250	1125

ORANGE1
HOLDING

SICME ORANGE1 S.r.l.
Montebello Vicentino - HQ
Via del Lavoro 7
36054 - Montebello Vicentino
(VI) Italy
Tel: 02 8002 6000

Torino Plant
Str. del Francese 130
10156 - Torino
(TO) Italy
Tel: 011 407 6311

info@orange1.eu
www.orange1.eu

The information shown in this publication is purely indicative. Orange1 reserves the right to make any modifications to the products as it sees fit.

#11 - 09/2023

ORANGE1 ELECTRIC MOTORS · ORANGE1 FOUNDRY · ORANGE1 PRECISION · ORANGE1 HUNGARY · SICME ORANGE1