SICME | ORANGE1

Antriebe Neumann GmbH
Parkstrasse 50 • 61231 Bad Nauheim

Tel.: 06032 - 6079383
Fax: 06032 - 6079384
info@neumann-antriebe.de
www.neumann-antriebe.de

SM-ML SERIES

STEEL MILL HEAVY DUTY DC MOTORS

FROM 3,75 TO 184kW
FROM 158 TO 17400Nm

Member of ORANGE1 HOLDING

ORANGE1 HOLDING

A dynamic, strong and ambitious Group

Orange1 Holding is an international renown Group, one of the most important European manufacturers of single-phase and three-phase asynchronous electric motors. It has an annual capacity of more than 1 million motors and 5 million electric stators. The group, established in 1971 by Leone Donazzan, chaired today by his son Armando Donazzan, is strongly focused on technological innovation, performance and customization to meet individual clients requirements.

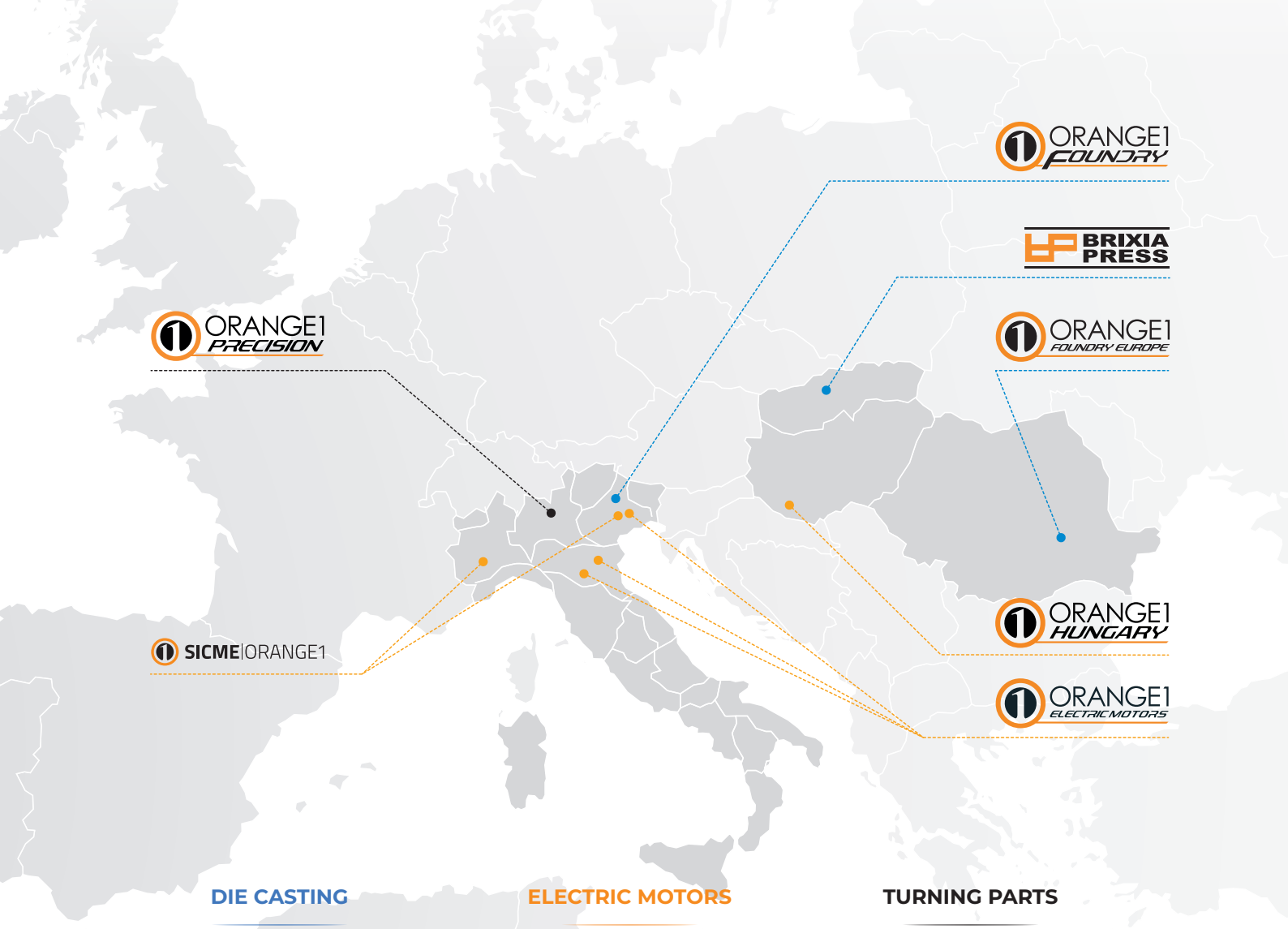

DIE CASTING **ELECTRIC MOTORS** **TURNING PARTS**

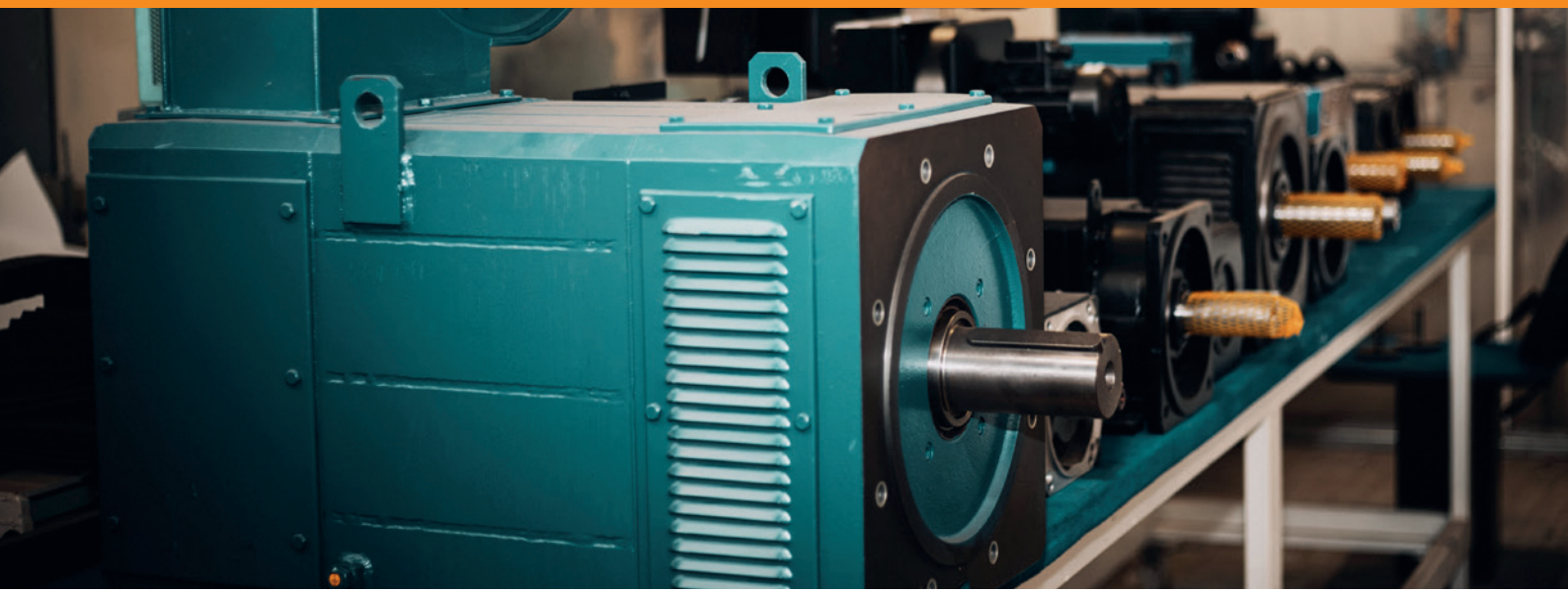

SICME | ORANGE1

Sicme Orange1 has born from the merge of Sicme Motori and Magnetic.
Sicme Motori, founded in 1967, produces high quality DC motors and it represents a benchmark of excellence for its technology providing the best economical solutions for many different applications. Since 2002 it has been cooperating actively with the Institute of Electrical Engineering of the Polytechnic of Turin and it has been one of the world's largest producers of wind generators. In 2008, it has developed motors with ASR technology, the most revolutionary type of electric machine in the world, and in 2014 developed an innovative range of synchronous reluctance motors IE4 with a specific patent. A company with a 40 years history, well-known around the world for the high quality and product technology, it produces Asynchronous motors up to 3700 Kw, Synchronous motors up to 2700 Kw, Hydroelectric Generators up to 3000 Kw, Mini-Wind generators up to 200 Kw and Wind Turbines up to 5000 Kw. Magnetic Motors, founded in 1973, manufactures electrical machines specifically designed to be used for variable speed application. The company is located in Montebello Vicentino, Vicenza – Italy.

PRODUCTIONPLANTS

LOCATION	MOTORS PRODUCTION
MONTEBELLO VIC.NO - ITALY 36054 (VI) Via del Lavoro 7	AC VECTORIAL MOTORS DC MOTORS BRUSHLESS MOTORS TORQUE MOTORS
TORINO - ITALY 10156 (TO) Strada del Francese 130	AC VARIABLE SPEED MOTORS DC MOTORS GENERATORS SERVICE RELUCTANCE MOTORS

SICME | ORANGE1

General

Steel mill heavy duty DC motors series SM-ML (MILL motors) have been designed for use in variable speed drives for heavy duty applications. Motors have skewed armature slots to ensure low torque ripples at slow speed. Motors are available up to 17400Nm.
These motors exactly meet A.I.S.E. Standard requirements in terms of:

- outputs (torques, speeds, powers, etc.)
- overall and coupling dimensions
- dImensions and positioning of ventilation openings

so they are fully interchangeable to whatever DC motor of same frame size manufactured in accondance with A.I.S.E. Standards

Motor design

Standards:	Ratings, operating features and outline dimensions according to A.I.S.E. technical report No. 1 - 1991/IPSS 1-03-002-94 General features and testing according to IEC60034-1
Supply:	From 3-phase fully controlled bridge (no yoke required if armature current form factor is ≤1,05)
Impregnation:	VPI (with solventless resin)
Winding terminals:	TIG welding of armature coil connections to commutator
Insulation:	Class H
Temperature rise:	110°C
Ambient temp:	40°C max (without derating)
Altitude of installation:	1000 m.a.s.l. max (without derating)
Balancing:	ISO 2373, grade "N"
Mounting arrangement:	IM1004 (B3), horizontal with feet and 2 tapered shaft ends
Shaft:	Removable and replaceable shaft, with 2 tapered extensions (taper 1:9,6 – 1 ¼ per foot) On each extension a nut and a split lockwasher are provided. Shaft guard is fastened on the commutator end
Enclosures:	Convertible between TENV and TEFV enclosure or with top mounted blower unit

Enclosures			Degree of protection*	Type of Cooling	
Type	Description	Sicme Orange1 Code			
TENV	Totally Enclosed Not Ventilated	CNV	IP55	IC410	ST
TEFV	Totally Enclosed Forced Ventilated (by external and separate source)	CBA	IP55	IC37	ST
DPFG-BV	Drip-Proof Fully Guarded , Blower Ventilated	PVA	IP23	IC06	OR
DPFG	Drip-Proof Fully Guarded	PV	IP23	IC01	OR
DPFG-SV	Drip-Proof Fully Guarded, Separately Ventilated	BPVA	IP23	IC16	OR
TEAAC	Totally Enclosed Air-to-Air Cooled	CBARO	IP55	IC666	OR
TEWAC	Totally Enclosed Water-to-Air Cooled	CBARH	IP55	IC86W	OR

* IEC60034-5 / ** IEC60035-6 / ST: Standard / OR: On request

Terrminal box:	No terminal box, loose hanging leads as standard (right side facing DE)
Thermal protection:	N°. 1 thermoprotector on auxiliary windings as standard Full speed, half speed and quarter speed design available.

General

Motor design: SM 802-804 series
- Steel fabricated, split frame
- Heavy-duty roller bearings with easily removable bearing housings

Motor design: ML 806-818 series
- Fully laminated stator core, no split frame
- Compensating windings (as option on frames 806-808-810, as standard on frames 812-814 816-818)
- Heavy-duty roller bearings

Fully laminated machines have the relevant advantage to accept extremely high current gradients (200In/sec). These motors withstand without any problem to frequent and extremely rapid current pulses, arising from static converters.

Options available
- 1 tapered shaft end only (IM1003)
- 1 (IM1001) or 2 (IM1002) cylindrical shaft ends
- terminal box
- different kind of thermal protection (Pt100, PTC, etc.)
- tachometers, pulse generators, overspeed switches
- anticondensation heater
- brakes
- etc.

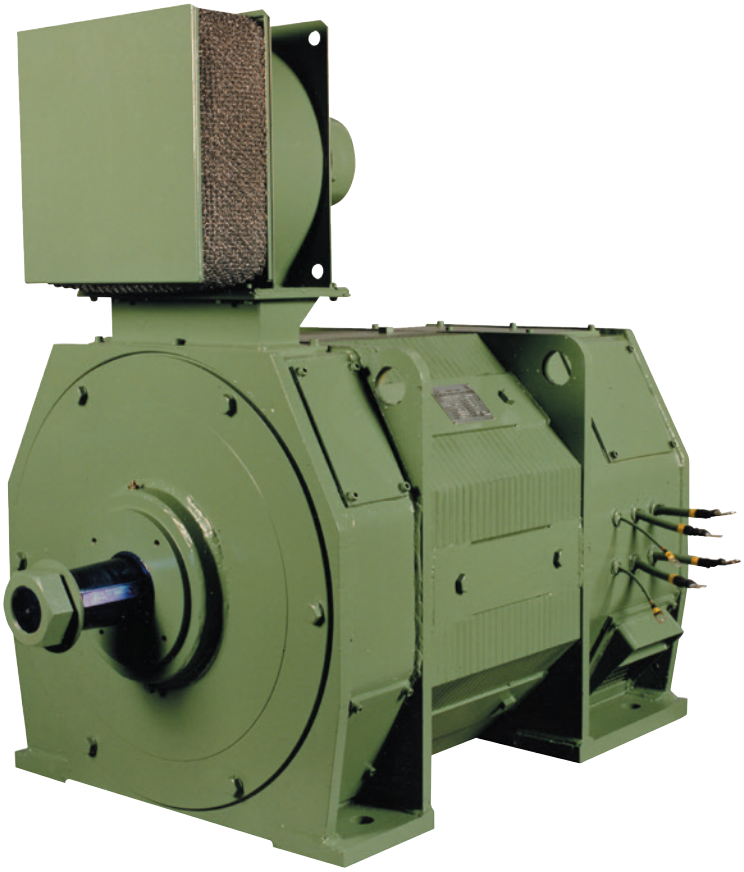

SICME ORANGE1

Output data - Frames SM802-804

Ratings are referred to 230V. Motors can work with voltage up to 500V (with maximum torque lower than the one indicated for 230V; please ask Sicme Orange1 Sales Dept.).
SM series motors can be supplied, with same ratings, with 460 and 550V also.

Frame Size SM	TENV S2-60' (1)						TENV S2-30' Series			TENV S3-30% (4)								
	Power		Speed RPM				Power		Speed	Series			Compound			Shunt		
										Power		Speed	Power		Speed	Power		Speed
	KW	HP	Series	Comp. (2)	Straight Stunt	Adj. Speed (3)	KW	HP	RPM	KW	HP	RPM	KW	HP	RPM	KW	HP	RPM
802 A	3,75	5	900	1025	1025	1025/2050	5	6,5	750	4,1	5,5	840	3,75	5	1080	3,75	5	1130
802 B	5,6	7,5	800	900	900	900/1800	7,5	10	675	6	8	780	5,6	7,5	950	5,6	7,5	1000
802 C	7,5	10	800	900	900	900/1800	10	13,5	675	7,5	10	800	7,1	9,5	940	6,7	9	1000
803	11,2	15	725	800	800	800/2000	14,1	19	620	11,2	15	725	10,8	14,5	840	10,5	14	880
804	15	20	650	725	725	725/1800	19,5	26	580	15	20	650	13,8	18,5	775	12,7	17	800

(1) or continuous duty, blower ventilated
(2) 50% series, 50% shunt or straight shunt
(3) A light stabilizing series field may be used to get these speed ranges. Constant power speed variation by field weakening
(4) Continuous repeated cycles of 5 minutes duration, with load on for 1,5 minute and power off for 3,5 minutes; shunt fields continuously excited.

Frame Size SM	Maximum starting torque						Maximum running torque at 230V						Moment of inertia		Max Safe Speed
	Series		Compound		Shunt		Series		Compound		Shunt				
	Nm	LB.FT	Nm	LB.FT	Nm	LB.FT	Nm	LB.FT	Nm	LB.FT	Nm	LB.FT	Kgm²	LB.FT²	RPM
802 A	198	145	157	115	125	92	158	116	123	90	102	75	0,175	1,03	3600
802 B	330	245	270	198	216	158	268	196	210	154	177	130	0,175	1,03	3600
802 C	450	330	360	263	237	175	360	262	280	205	220	160	0,225	1,33	3600
803	740	545	610	445	400	295	600	440	470	345	360	265	0,4	2,36	3300
804	1100	810	880	650	590	435	880	650	685	505	530	390	0,625	3,7	3000

Frame Size SM	Air requirement for TEFV						Weight (7)	DE & NDE bearings (5)
	Air Flow		Static pressure at inlet					
			DE (5)		NDE (5)			
	m³/min	CFM	Pa (6)	Inches H2O	Pa (6)	Inches H2O	Kg	
802 A	3,2	110	190	3/4	130	½	240	NJ 310 C3
802 B	3,2	110	190	3/4	130	½	240	NJ 310 C3
802 C	4,8	160	250	1	130	½	260	NJ 310 C3
803	5,7	200	320	1 e 1/4	130	½	335	NJ 311 C3
804	7	250	320	1 e 1/4	130	½	440	NJ 313 C3

(5) DE: Drive End
NDE: Non Drive End
(6) 1Pa = 0,1mm H2O
(7) Weight is for TENV-TEFV version

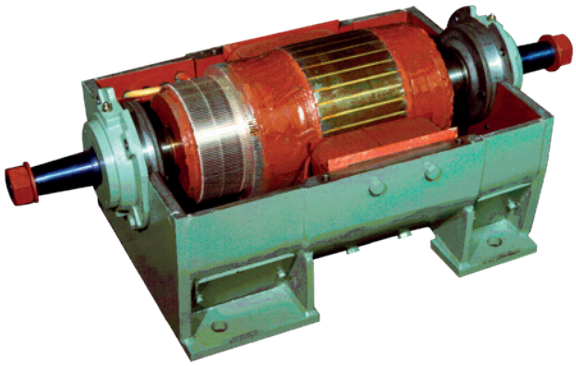

SICME ORANGE1

Output Data - Frames ML806-818

Ratings are referred to 230V. Motors can work with voltage up to 500V (with maximum torque lower than the one indicated for 230V; Sicme Orange1 Sales Dept.).
ML series motors can be supplied, with same ratings, with 460 and 550V also.

Frame Size SM	TENV S2-60' (1)						TENV S2-30' Series			TENV S3-30% (4)								
	Power		Speed RPM				Power		Speed	Series			Compound			Shunt		
										Power		Speed	Power		Speed	Power		Speed
	KW	HP	Series	Comp. (2)	Straight Stunt	Adj. Speed (3)	KW	HP	RPM	KW	HP	RPM	KW	HP	RPM	KW	HP	RPM
806	22	30	575	650	650	650/1950	28,5	39	500	22	30	575	21	28,5	690	18,5	25	715
808	37	50	525	575	575	575/1725	48	65	450	29,5	40	570	27,5	37,5	625	26	35	630
810	51,5	70	500	550	550	550/1650	66	90	440	44	60	550	38,5	52,5	615	33	45	600
812	73,5	100	475	515	515	515/1300	99	135	420	62,5	85	525	55	75	580	44	60	565
814	110	150	460	500	500	500/1250	147	200	400	84,5	115	515	81	110	565	62,5	85	560
816	147	200	450	480	480	480/1200	195	265	400	110	150	500	103	140	540	81	110	535
818	184	250	410	435	435	435/1100	239	325	360	136	185	485	121	165	490	95,5	130	470

(1) or continuous duty, blower ventilated
(2) 50% series, 50% shunt or straight shunt
(3) A light stabilizing series field may be used to get these speed ranges. Constant power speed variation by field weakening
(4) Continuous repeated cycles of 5 minutes duration, with load on for 1,5 minute and power off for 3,5 minutes; shunt fields continuously excited.

Frame Size SM	Maximum starting torque						Maximum running torque at 230V						Moment of inertia		Max Safe Speed
	Series		Compound		Shunt		Series		Compound		Shunt				
	Nm	LB.FT	Nm	LB.FT	Nm	LB.FT	Nm	LB.FT	Nm	LB.FT	Nm	LB.FT	Kgm²	LB.FT²	RPM
806	1870	1370	1500	1100	990	725	1500	1100	1170	855	880	650	1,00	5,90	2600
808	3420	2500	2800	2050	1870	1370	2730	2000	2180	1600	1660	1220	1,65	9,75	2300
810	5050	3700	4100	3000	2730	2000	4030	2950	3180	2330	2450	1800	2,50	14,75	2200
812	7500	5500	6270	4600	4170	3060	6050	4430	4900	3600	3750	2750	3,85	22,70	1900
814	11650	8550	9650	7100	6420	4725	9300	6850	7550	5550	5800	4250	7,5	44,3	1700
816	15950	11700	13300	9800	8900	6550	12600	9300	10400	7650	8000	5900	14	82,5	1600
818	21800	16000	18500	13600	12300	9050	17400	12800	14400	10600	11050	8150	24	142	1500

Frame Size SM	Air requirement for TEFV						Weight (7)	DE & NDE bearings (5)
	Air Flow		Static pressure at inlet					
			DE (5)		NDE (5)			
	m³/min	CFM	Pa (6)	Inches H2O	Pa (6)	Inches H2O	Kg	
806	9,6	335	400	1 e 1/2	200	3/4	650	NJ 315 C3
808	12	425	400	1 e 1/2	200	3/4	950	NJ 317 C3
810	15	525	500	2	300	1 e 1/4	1270	NJ 319 C3
812	21	750	600	2 e 1/4	450	1 e 3/4	1600	NJ 321 C3
814	25	900	600	2 e 1/4	350	1 e 1/4	2100	NJ 322 C3
816	34	1200	650	2 e 1/2	400	1 e 1/2	2600	NJ 326 C3
818	45	1600	750	3	450	1 e 3/4	3500	NJ 328 C3

(5) DE: Drive End
NDE: Non Drive End
(6) 1Pa = 0,1mm H2O
(7) Weight is for TENV-TEFV version

Dimensions - Frames SM802-804

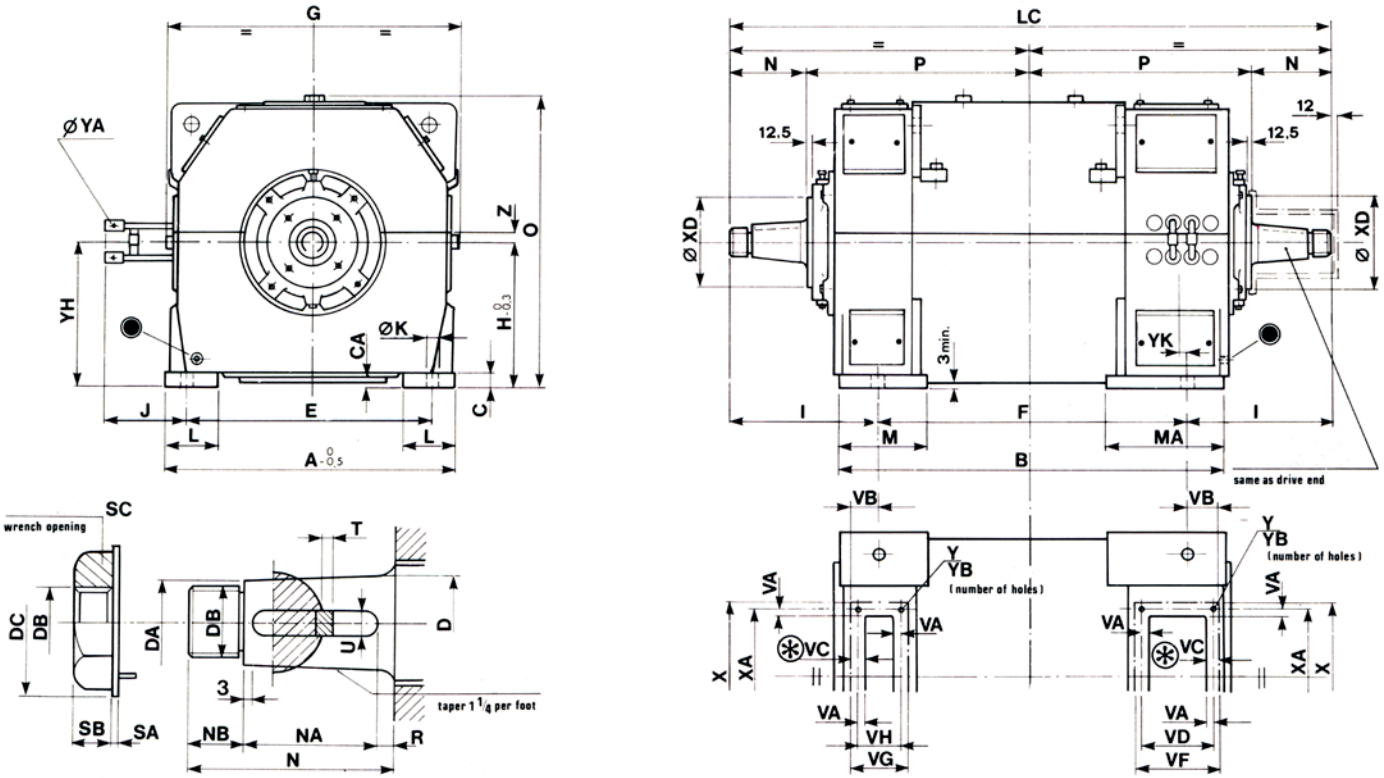

Ground terminal M10

Minimum mounting surface all around both ventilating openings

Frame Size SM	Shaft Nut and Split Lockwasher				
	DB	DC	SA	SB	SC
802	M30x2	63	1,6	24	46
803	M36x3	73	1,6	25	55
804	M36x3	73	1,6	25	55

Frame Size SM	A	B	C	CA	E	F	G	H	I	J	K	L	LC	M	MA	O	P	YA	YH	YK	XD	Z
802	381	520	17	10,5	318	419	400	193,5	208	140	22	73	835	130	180	397	305	10,5	210	45	114	22
803	432	597	17	13	356	457	445	216	241,5	140	24	78	940	160	210	440	343	10,5	240	45	140	25
804	457	648	22	13,5	381	482	475	228,5	254	140	24	85	990	165	235	465	368	10,5	255	45	140	25

Frame Size SM	Shaft End							Keyway		Ventilation Opening Flanges										
	D	DA	DB	N	NA	NB	R	T	U	VA	VB	VC	VD	VF	VG	VH	X	XA	Y	YB
802	44,45	37,17	M30x2	112,5	70	30	12,5	6,35	12,70	2,5	22	10	105	120	55	40	185	170	M6	4
803	50,80	42,22	M36x3	127	82,5	32	12,5	6,35	12,70	5	45	12,5	112	127	83	68	215	200	M8	4
804	50,80	42,22	M36x3	127	82,5	32	12,5	6,35	12,70	5	57	12,5	125	140	70	55	230	215	M8	4

Dimensions - Frames ML806-812

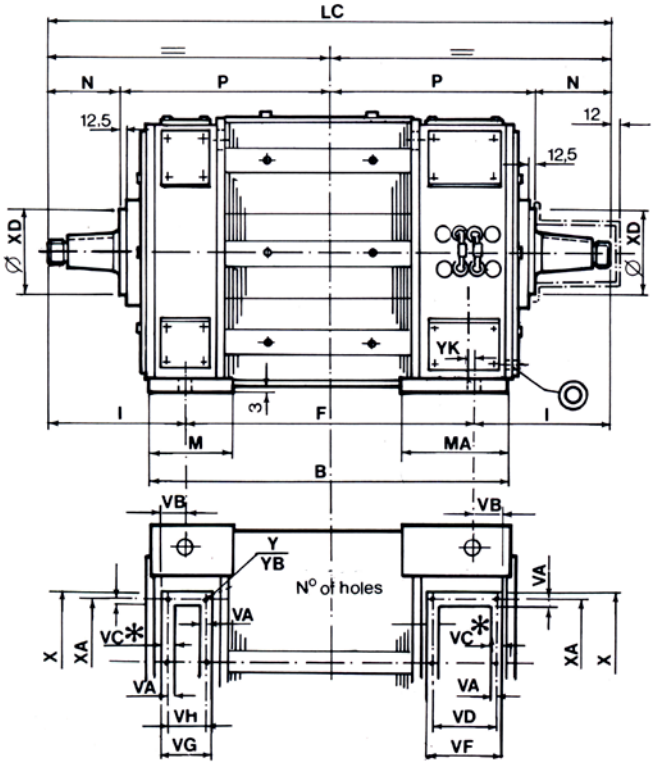

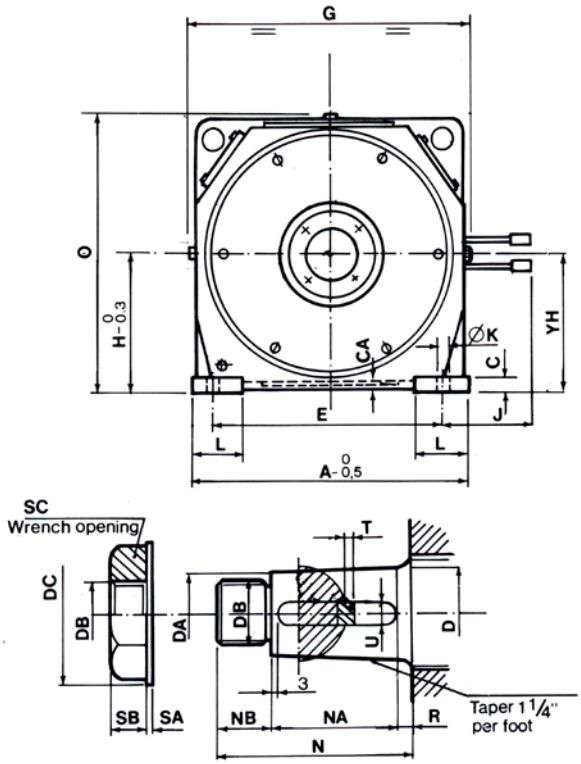

◎ Ground terminal M16

✻ Minimum mounting surface all around both ventilating openings

Frame Size ML	Shaft Nut and Split Lockwasher				
	DB	DC	SA	SB	SC
806	M42x3	90	1,6	27	65
808	M48x3	102	1,6	30	75
810	M56x4	112	1,6	33	85
812	M64x4	125	1,6	36	95

Frame Size ML	A	B	C	CA	E	F	G	H	I	J	K	L	LC	M	MA	O	P	YA	YH	YK	XD
806	508	698	22	15	419	534	520	254	270	140	26	96	1074	160	260	515	394	10,5	270	40	159
808	578	794	30	24	476	628	590	285,5	289	190	33	106	1206	185	295	580	444,5	10,5	300	70	184
810	622	825	30	24	520	660	635	311	308	190	33	116	1276	185	305	632	476	10,5	325	70	203
812	686	914	32	24	572	724	700	339,5	337	190	33	125	1398	195	305	690	521	10,5	355	76	222

Frame Size ML	Shaft End							Keyway		Ventilation Opening Flanges										
	D	DA	DB	N	NA	NB	R	T	U	VA	VB	VC	VD	VF	VG	VH	X	XA	Y	YB
806	63,50	53,62	M42x3	143	95	35	13	6,35	12,70	6	54	13,5	137	152	87	72	260	245	M8	6
808	76,20	64,97	M48x3	158,5	108	38	12,5	6,35	19,05	6	51	13,5	150	165	90	75	292	277	M8	6
810	82,55	71,32	M56x4	162	108	41	13	6,35	19,05	6	54	13,5	163	178	92	77	305	290	M8	6
812	90,07	79,59	M64x4	178	120	45	13	6,35	19,05	7,5	63,5	16	193	210	125	108	350	333	M8	6

Dimensions - Frames ML814-818

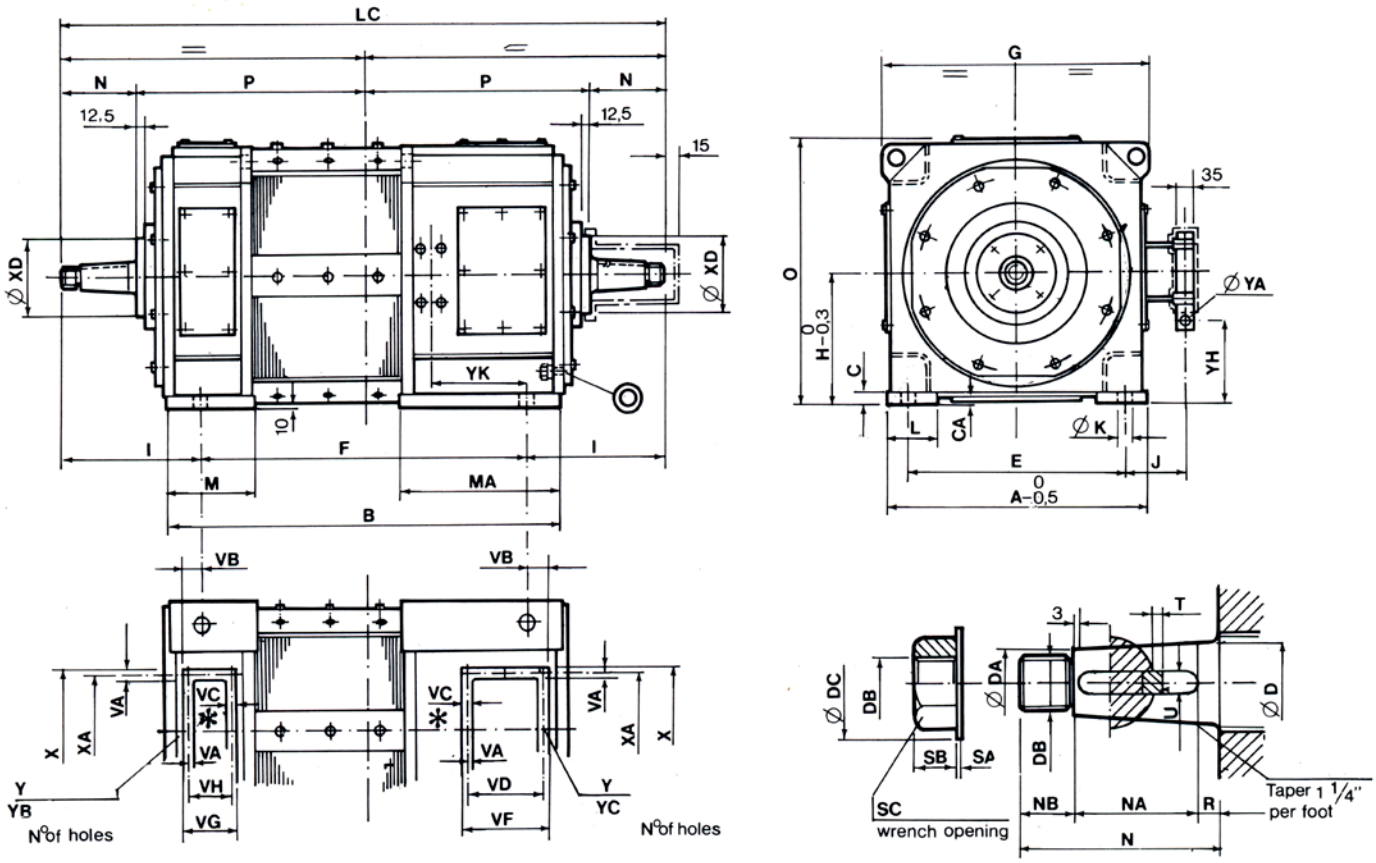

◎ Ground terminal M16

✱ Minimum mounting surface all around both ventilating openings

Frame Size ML	Shaft Nut and Split Lockwasher				
	DB	DC	SA	SB	SC
814	M76x4	114	1,5	30	110
816	M90x4	165	1,5	35	130
818	M90x4	165	1,5	35	130

Frame Size ML	A	B	C	CA	E	F	G	H	I	J	K	L	LC	M	MA	O	P	YA	YH	YK	XD	Z
814	762	1054	40	18	635	813	762	374,5	365	230	40	155	1543	210	420	750	590,5	10,5	270	190	254	22
816	825	1187	40	22	686	889	825	406,5	412,5	230	40	175	1714	230	490	820	660,5	10,5	302	240	254	25
818	914	1264	45	25	762	990	915	451	402	230	45	185	1794	245	520	910	698,5	10,5	346	275	254	25

Frame Size ML	Shaft End							Keyway		Ventilation Opening Flanges											
	D	DA	DB	N	NA	NB	R	T	U	VA	VB	VC	VD	VF	VG	VH	X	XA	Y	YB	YC
814	107,95	95,47	M76x4	181	120	48	13	9,5	25,4	7,5	86	16	220	235	140	123	387	370	M8	6	8
816	117,48	103,65	M90x4	196,5	133	51	12,5	9,5	31,7	11,5	114	25	253	280	170	143	407	380	M10	6	8
818	127,00	111,82	M90x4	198,5	146	40	12,5	12,7	31,7	11,5	98	25	278	305	180	153	460	433	M10	6	8

Notes:

Customers can determine whether a specific product is suitable for their needs and are thus responsible for the selection, use and results obtained by any product showed in this catalogue.
The information contained in the present catalogue does not guarantee the characteristics for the use.
The products listed in this catalogue are exclusively designed and built for industrial purpose.
For particular cases of NON-industrial environments, or where other types of protection must be provided (for example against contact with children fingers, etc.), these additional protections must be realized by the customer.
Any non-observance of the rules for installation, use and maintenance or any modification/tampering with the motor makes the guarantee invalid and exempts SICME ORANGE1 from any responsibility.
All data and indications shown in this catalogue have to be considered only as a guideline.
Any differently use of the motor from the specifications indicated in this catalogue does not involve any liability for SICME ORANGE1 as manufacturer.
SICME ORANGE1 reserves the right to modify at any time and without notice the data, the technical characteristics, the dimensions, the weights and the illustrations.
SICME ORANGE1 refuses all responsibility for direct or indirect damages caused by possible errors and/or omissions in the present catalogue.
The reproduction, even in part, of the present catalogue must be authorized in writing by SICME ORANGE1.

WARNING
The motors and the electrical devices that supply them are electrical components installed on machines and industrial systems subject to high voltage.
During operation, these components can be dangerous since they are live and have non-insulated and rotating parts.
Therefore, they can be extremely harmful to personnel and objects if the instructions for the installation, use and the maintenance are not respected.
The motors are always equipped with the installation, use and maintenance instruction manual.
Is always necessary read and understand all the information contained in the manual before proceeding to connect and to start up the installation.
If the above documentation is lacking, please request a copy to SICME ORANGE1.

CAUTION
All information, data and drawings given in this catalogue are purely indicative and may be changed without prior notice.
SICME ORANGE1 shall not be responsible if the products illustrated here are used outside limits of the specifications given.

ORANGE1
HOLDING

SICME ORANGE1 S.r.l.
Montebello Vicentino - HQ
Via del Lavoro 7
36054 - Montebello Vicentino
(VI) Italy
Tel: 02 8002 6000

Torino Plant
Str. del Francese 130
10156 - Torino
(TO) Italy
Tel: 011 407 6311

info@orange1.eu
www.orange1.eu

#03 - 02/2024

ORANGE1 ELECTRIC MOTORS · ORANGE1 FOUNDRY · ORANGE1 PRECISION · ORANGE1 HUNGARY · SICME ORANGE1